NCT5532D

Nuvoton LPC I/O

Date: September 30th, 2011 Revision 0.7

Table of Contents –

1. GENERAL DESCRIPTION 1
2. FEATURES 2
3. BLOCK DIAGRAM 5
4. PIN LAYOUT 6
5. PIN DESCRIPTION 7
   - 5.1 LPC Interface 8
   - 5.2 Serial Port Interface 8
   - 5.3 KBC Interface 8
   - 5.4 CIR Interface 9
   - 5.5 Hardware Monitor Interface 9
   - 5.6 Intel® PECI Interface 10
   - 5.7 Advanced Configuration & Power Interface 10
   - 5.8 Advanced Sleep State Control 10
   - 5.9 SMBus Interface 11
   - 5.10 Power Pins 11
   - 5.11 AMD Power-On Sequence 11
   - 5.12 AMD SB-TSI Interface 12
   - 5.13 Dual Voltage Control 12
   - 5.14 DSW 12
   - 5.15 IR 12
   - 5.16 General Purpose I/O Port 12
     - 5.16.1 GPIO-2 Interface 12
     - 5.16.2 GPIO-4 Interface 13
     - 5.16.3 GPIO-5 Interface 13
     - 5.16.4 GPIO-7 Interface 14
     - 5.16.5 GPIO-8 Interface 14
   - 5.17 Strapping Pins 15
   - 5.18 Internal pull-up, pull-down pins 15
6. GLUE LOGIC 17
   - 6.1 ACPI Glue Logic 17
   - 6.2 BKFD_CUT & LATCH_BKFD_CUT 19
   - 6.3 3VSBSW# 20
   - 6.4 PSON# Block Diagram 21
   - 6.5 PWROK 22
   - 6.6 Front Panel LEDs 23
     - 6.6.1 Automatic Mode 23
     - 6.6.2 Manual Mode 24
     - 6.6.3 S0~S5 LED Blink Block Diagram 24
     - 6.6.4 LED Pole (LED_POL) 25
     - 6.6.5 Deeper Sleeping State Detect Function 26
   - 6.7 Advanced Sleep State Control (ASSC) Function 28
     - 6.7.1 When ASSC is disabled 28
     - 6.7.2 When ASSC is enabled (Enter into Deeper Sleeping State) 29
     - 6.7.3 When ASSC is enabled (Exit Deeper Sleeping State) 29
     - 6.7.4 SLP_S5#_LATCH Control Function 30

6.8 Intel DSW Function 31
6.8.1 Enter DSW State timing diagram 31
6.8.2 Exit DSW State timing diagram 32
6.8.3 Application Circuit 32
6.9 AMD Power-On Sequence 33
7. CONFIGURATION REGISTER ACCESS PROTOCOL 35
7.1 Configuration Sequence 37
7.1.1 Enter the Extended Function Mode 37
7.1.2 Configure the Configuration Registers 37
7.1.3 Exit the Extended Function Mode 38
7.1.4 Software Programming Example 38
8. HARDWARE MONITOR 39
8.1 General Description 39
8.2 Access Interfaces 39
8.3 LPC Interface 39
8.4 I^2C interface 41
8.5 Analog Inputs 42
8.5.1 Voltages Over 2.048 V or Less Than 0 V 43
8.5.2 Voltage Data Format 43
8.5.3 Temperature Data Format 43
8.6 PECI 46
8.7 Fan Speed Measurement and Control 48
8.7.1 Fan Speed Reading 48
8.7.2 Fan Speed Calculation by Fan Count Reading 48
8.7.3 Fan Speed Calculation by Fan RPM Reading 48
8.7.4 Fan Speed Control 48
8.7.5 SMART FAN™ Control 49
8.7.6 Temperature Source & Reading for Fan Control 50
8.8 SMART FAN™ I 50
8.8.1 Thermal Cruise Mode 50
8.8.2 Speed Cruise Mode 52
8.9 SMART FAN™ IV & Close Loop Fan Control Mode 53
8.9.1 Step Up Time / Step Down Time 56
8.9.2 Fan Output Step 56
8.9.3 Revolution Pulse Selection 57
8.9.4 Weight Value Control 57
8.10 Alert and Interrupt 59
8.10.1 SMI# Interrupt Mode 60
8.10.2 Voltage SMI# Mode 60
8.10.3 Fan SMI# Mode 60
8.10.4 Temperature SMI# Mode 60
8.10.5 OVT# Interrupt Mode 64
9. HARDWARE MONITOR REGISTER SET 66
9.1 Address Port (Port x5h) 66
9.2 Data Port (Port x6h) 66
9.3 SYSFANOUT PWM Output Frequency Configuration Register – Index 00h (Bank 0) 67
9.4 SYSFANOUT Output Value Select Register – Index 01h (Bank 0) 67
9.5 CPUFANOUT PWM Output Frequency Configuration Register – Index 02h (Bank 0) 68

9.6 CPUFANOUT Output Value Select Register – Index 03h (Bank 0) 69
9.7 SYSFANOUT Configuration Register I – Index 04h (Bank 0) 69
9.8 Reserved Register – Index 05h ~ 0Fh (Bank 0) 70
9.9 Reserved Register – Index 10h (Bank 0) 70
9.10 Reserved Register – Index 11h (Bank 0) 70
9.11 Reserved Register – Index 12h (Bank 0) 70
9.12 Reserved Register – Index 13h (Bank 0) 70
9.13 Reserved Register – Index 14h (Bank 0) 70
9.14 Reserved Register – Index 15h (Bank 0) 70
9.15 Reserved Register – Index 16-17h (Bank 0) 70
9.16 OVT# Configuration Register – Index 18h (Bank 0) 70
9.17 Reserved Registers – Index 19h ~ 1Fh (Bank 0) 70
9.18 Value RAM — Index 27h ~ 3Fh (Bank 0) 70
9.19 Configuration Register – Index 40h (Bank 0) 71
9.20 Interrupt Status Register 1 – Index 41h (Bank 0) 72
9.21 Interrupt Status Register 2 – Index 42h (Bank 0) 72
9.22 SMI# Mask Register 1 – Index 43h (Bank 0) 73
9.23 SMI# Mask Register 2 – Index 44h (Bank 0) 73
9.24 Interrupt Status Register 4 – Index 45h (Bank 0) 73
9.25 SMI# Mask Register 3 – Index 46h (Bank 0) 74
9.26 Reserved Register – Index 47h (Bank 0) 74
9.27 Serial Bus Address Register – Index 48h (Bank 0) 74
9.28 Reserved Register – Index 49h ~ 4Bh (Bank 0) 75
9.29 SMI/OVT Control Register1 – Index 4Ch (Bank 0) 75
9.30 FAN IN/OUT Control Register – Index 4Dh (Bank 0) 75
9.31 Bank Select Register – Index 4Eh (Bank 0) 76
9.32 Nuvoton Vendor ID Register – Index 4Fh (Bank 0) 76
9.33 Reserved Register – Index 50h (Bank 0) 77
9.34 Reserved Register – Index 51h ~ 57h (Bank 0) 77
9.35 Chip ID – Index 58h (Bank 0) 77
9.36 Reserved Register – Index 59h ~ 5Ch (Bank 0) 77
9.37 VBAT Monitor Control Register – Index 5Dh (Bank 0) 77
9.38 Current Mode Enable Register – Index 5Eh (Bank 0) 78
9.39 Reserved Register – Index 5F (Bank 0) 79
9.40 Reserved Register – Index 60 (Bank 0) 79
9.41 Reserved Register – Index 61F ~ 72F (Bank 0) 79
9.42 MONITOR TEMPERATURE 1 Register (Integer Value)- Index 73h (Bank 0) 79
9.43 MONITOR TEMPERATURE 1 Register (Fractional Value)- Index 74h (Bank 0) 79
9.44 MONITOR TEMPERATURE 2 Register (Integer Value)- Index 75h (Bank 0) 79
9.45 MONITOR TEMPERATURE 2 Register (Fractional Value)- Index 76h (Bank 0) 80
9.46 Reserved Register - Index 77h (Bank 0) 80
9.47 Reserved Register - Index 78h (Bank 0) 80
9.48 Reserved Register - Index 79h (Bank 0) 80
9.49 Reserved Register - Index 7Ah (Bank 0) 80
9.50 Reserved Register - Index 7Ch (Bank 0) 80
9.51 Reserved Register – Index 7Dh~ADh (Bank 0) 80

9.52 PECI Temperature Reading Enable for SMIOVT and SMART FAN Control Register – Index AEh (Bank 0) 80
9.53 BEEP Control Register 1 – Index B2h (Bank0) 81
9.54 BEEP Control Register 2 – Index B3h (Bank0) 81
9.55 BEEP Control Register 3 – Index B4h (Bank0) 82
9.56 BEEP Control Register 4 – Index B5h (Bank0) 82
9.57 SYSFAN Monitor Temperature Source Select Register/ STOPDUTY Enable Register – Index 00h (Bank 1) 83
9.58 SYSFAN Target Temperature Register / SYSFANIN Target Speed_L Register – Index 01h (Bank 1) 84
9.59 SYSFAN MODE Register / SYSFAN TOLERRANCE Register – Index 02h (Bank 1). 84
9.60 SYSFANOUT Step Up Time Register – Index 03h (Bank 1) 85
9.61 SYSFANOUT Step Down Time Register – Index 04h (Bank 1) 85
9.62 SYSFANOUT Stop Value Register – Index 05h (Bank 1) 85
9.63 SYSFANOUT Start-up Value Register – Index 06h (Bank 1) 86
9.64 SYSFANOUT Stop Time Register – Index 07h (Bank 1) 86
9.65 Reserved Register – Index 08h (Bank 1) 86
9.66 SYSFANOUT Output Value Select Register – Index 09h (Bank 1) 86
9.67 Reserved Register – Index 0Ah~0Bh (Bank 1) 87
9.68 SYSFANIN Tolerance_H / Target Speed_H Register – Index 0Ch (Bank 1) 87
9.69 Reserved Register – Index 0Dh~1Fh (Bank 1) 87
9.70 SMART FAN IV SYSFANOUT STEP Register – Index 20h (Bank 1) 87
9.71 SYSFAN (SMART FAN^{TM} IV) Temperature 1 Register(T1) – Index 21h (Bank 1) 87
9.72 SYSFAN (SMART FAN^{TM} IV) Temperature 2 Register(T2) – Index 22h (Bank 1) 88
9.73 SYSFAN (SMART FAN^{TM} IV) Temperature 3 Register(T3) – Index 23h (Bank 1) 88
9.74 SYSFAN (SMART FAN^{TM} IV) Temperature 4 Register(T4) – Index 24h (Bank 1) 88
9.75 Reserved Register – Index 25h~26h (Bank 1) 89
9.76 SYSFAN (SMART FAN^{TM} IV) DC/PWM 1 Register – Index 27h (Bank 1) 89
9.77 SYSFAN (SMART FAN^{TM} IV) DC/PWM 2 Register – Index 28h (Bank 1) 89
9.78 SYSFAN (SMART FAN^{TM} IV) DC/PWM 3 Register – Index 29h (Bank 1) 89
9.79 SYSFAN (SMART FAN^{TM} IV) DC/PWM 4 Register – Index 2Ah (Bank 1) 89
9.80 Reserved Register – Index 2Bh~30h (Bank 1) 90
9.81 SYSFAN 3-Wire Enable Register – Index 31h (Bank 1) 90
9.82 Reserved Register – Index 32h~34h(Bank 1) 90
9.83 SYSFAN (SMART FAN^{TM} IV) Critical Temperature Register – Index 35h (Bank 1) 90
9.84 SYSFAN Enable Critical Duty – Index 36h (Bank 1) 90
9.85 SYSFAN Critical Duty Register – Index 37h (Bank 1) 91
9.86 SYSFANOUT Critical Temperature Tolerance Register – Index 38h (Bank 1) 91
9.87 Weight value Configuration Register – Index 39h (Bank 1) 91
9.88 SYSFANOUT Temperature Step Register – Index 3Ah (Bank 1) 92
9.89 SYSFANOUT Temperature Step Tolerance Register – Index 3Bh (Bank 1) 92
9.90 SYSFANOUT Weight Step Register – Index 3Ch (Bank 1) 93
9.91 SYSFANOUT Temperature Base Register – Index 3Dh (Bank 1) 93
9.92 SYSFANOUT Temperature Fan Duty Base Register – index 3Eh (Bank 1) 93
9.93 SYSFAN PECIERR DUTY Enable Register – Index 3Fh (Bank 1) 93
9.94 Reserved Register – Index 40h (Bank 1) 94
9.95 SYSFANOUT Pre-Configured Register For PECI Error – Index 41h (Bank 1) 94

9.96 Reserved Register – Index 42h ~ 4Fh (Bank 1) 94
9.97 SMIOVT2 Temperature Source (High Byte) Register – Index 50h (Bank 1)..... 94
9.98 SMIOVT2 Temperature Source (Low Byte) Register – Index 51h (Bank 1)..... 94
9.99 SMIOVT2 Temperature Source Configuration Register – Index 52h (Bank 1) 95
9.100 SMIOVT2 Temperature Source Hysteresis (High Byte) Register – Index 53h (Bank 1) 95
9.101 SMIOVT2 Temperature Source Hysteresis (Low Byte) Register – Index 54h (Bank 1)95
9.102 SMIOVT2 Temperature Source Over-temperature (High Byte) Register – Index 55h (Bank1) 96
9.103 SMIOVT2 Temperature Source Over-temperature (Low Byte) Register – Index 56h (Bank 1) 96
9.104 Reserved Register – Index 57h ~ FFh (Bank 1) 96
9.105 CPUFAN Monitor Temperature Source Select Register/ STOPDUTY Enable Register – Index 00h (Bank 2) 96
9.106 CPUFAN Target Temperature Register / CPUFANIN Target Speed_L Register – Index 01h (Bank 2) 97
9.107 CPUFAN MODE Register / CPUFAN TOLERRANCE Register – Index 02h (Bank 2) 98
9.108 CPUFANOUT Step Up Time Register – Index 03h (Bank 2) 98
9.109 CPUFANOUT Step Down Time Register – Index 04h (Bank 2)..... 98
9.110 CPUFANOUT Stop Value Register – Index 05h (Bank 2)..... 99
9.111 CPUFANOUT Start-up Value Register – Index 06h (Bank 2) 99
9.112 CPUFANOUT Stop Time Register – Index 07h (Bank 2)..... 99
9.113 Reserved Register – Index 08h (Bank 2) 99
9.114 CPUFANOUT Output Value Select Register – Index 09h (Bank 2) 99
9.115 Reserved Register – Index 0Ah~0Bh (Bank 2) 100
9.116 CPUFANIN Tolerance_H / Target Speed_H Register – Index 0Ch (Bank 2)..... 100
9.117 Reserved Register – Index 0Dh~1Fh (Bank 2) 100
9.118 SMART FAN IV CPUFANOUT STEP Register – Index 20h (Bank 2)..... 100
9.119 CPUFAN (SMART FAN^{TM} IV) Temperature 1 Register(T1) – Index 21h (Bank 2)..... 100
9.120 CPUFAN (SMART FAN^{TM} IV) Temperature 2 Register(T2) – Index 22h (Bank 2)..... 101
9.121 CPUFAN (SMART FAN^{TM} IV) Temperature 3 Register(T3) – Index 23h (Bank 2)..... 101
9.122 CPUFAN (SMART FAN^{TM} IV) Temperature 4 Register(T4) – Index 24h (Bank 2)..... 101
9.123 Reserved Register – Index 25h~26h (Bank 2) 102
9.124 CPUFAN (SMART FAN^{TM} IV) PWM1 Register – Index 27h (Bank 2) 102
9.125 CPUFAN (SMART FAN^{TM} IV) PWM2 Register – Index 28h (Bank 2) 102
9.126 CPUFAN (SMART FAN^{TM} IV) PWM3 Register – Index 29h (Bank 2) 102
9.127 CPUFAN (SMART FAN^{TM} IV) PWM4 Register – Index 2Ah (Bank 2)..... 102
9.128 Reserved Register – Index 2Bh~30h (Bank 2) 103
9.129 CPUFAN 3-Wire FAN Enable Register – Index 31h (Bank 2)..... 103
9.130 Reserved Register – Index 32h ~ 34h(Bank 2) 103
9.131 CPUFAN (SMART FAN^{TM} IV) Critical Temperature Register – Index 35h (Bank 2) .. 103
9.132 CPUFAN Enable Critical Duty – Index 36h (Bank 2)..... 103
9.133 CPUFAN Critical Duty Register – Index 37h (Bank 2)..... 104
9.134 CPUFANOUT Critical Temperature Tolerance Register – Index 38h (Bank 2)..... 104
9.135 Weight value Configuration Register – Index 39h (Bank 2) 104
9.136 CPUFANOUT Temperature Step Register – Index 3Ah (Bank 2)..... 105
9.137 CPUFANOUT Temperature Step Tolerance Register – Index 3Bh (Bank 2)..... 105

9.138 CPUFANOUT Weight Step Register – Index 3Ch (Bank 2) 106
9.139 CPUFANOUT Temperature Base Register – Index 3Dh (Bank 2) 106
9.140 CPUFANOUT Temperature Fan Duty Base Register – Index 3Eh (Bank 2) 106
9.141 CPUFAN PECIERR DUTY Enable Register – Index 3Fh (Bank 2) 106
9.142 Reserved Register – Index 40h (Bank 2) 107
9.143 CPUFANOUT Pre-Configured Register For PECI Error – Index 41h (Bank 2) 107
9.144 Reserved Register – Index 42h ~ FFh (Bank 1) 107
9.145 Reserved Register – Index 00h (Bank 3) 107
9.146 Reserved Register – Index 01h (Bank 3) 107
9.147 Reserved Register – Index 02h (Bank 3) 107
9.148 Reserved Register – Index 03h (Bank 3) 107
9.149 Reserved Register – Index 04h (Bank 3) 107
9.150 Reserved Register – Index 05h (Bank 3) 107
9.151 Reserved Register – Index 06h (Bank 3) 107
9.152 Reserved Register – Index 07h (Bank 3) 107
9.153 Reserved Register – Index 08h (Bank 3) 107
9.154 Reserved Register – Index 09h (Bank 3) 107
9.155 Reserved Register – Index 0Ch (Bank 3) 108
9.156 Reserved Register – Index 0Dh (Bank 3) 108
9.157 Reserved Register – Index 20h (Bank 3) 108
9.158 Reserved Register – Index 21h (Bank 3) 108
9.159 Reserved Register – Index 22h (Bank 3) 108
9.160 Reserved Register – Index 23h (Bank 3) 108
9.161 Reserved Register – Index 24h (Bank 3) 108
9.162 Reserved Register – Index 25h~26h (Bank 3) 108
9.163 Reserved Register – Index 27h (Bank 3) 108
9.164 Reserved Register – Index 28h (Bank 3) 108
9.165 Reserved Register – Index 29h (Bank 3) 108
9.166 Reserved Register – Index 2Ah (Bank 3) 108
9.167 Reserved Register – Index Index 2Bh~30h (Bank 3) 108
9.168 Reserved Register – Index 31h (Bank 3) 108
9.169 Reserved Register – Index 32h~34h(Bank 3) 108
9.170 Reserved Register – Index 35h (Bank 3) 108
9.171 Reserved Register – Index 36h (Bank 3) 108
9.172 Reserved Register – Index 37h (Bank 3) 108
9.173 Reserved Register – Index 38h (Bank 3) 108
9.174 Reserved Register – Index 39h (Bank 3) 108
9.175 Reserved Register – Index 3Ah (Bank 3) 108
9.176 Reserved Register – Index 3Bh (Bank 3) 109
9.177 Reserved Register – Index 3Ch (Bank 3) 109
9.178 Reserved Register – Index 3Dh (Bank 3) 109
9.179 Reserved Register – Index 3Eh (Bank 3) 109
9.180 Reserved Register – Index 3Fh (Bank 3) 109
9.181 Reserved Register – Index 40h (Bank 3) 109
9.182 Reserved Register – Index 41h (Bank 3) 109
9.183 Reserved Register – Index 42h ~ FFh (Bank 3) 109
9.184 PCH_CHIP_CPU_MAX_TEMP Register – Index 00h (Bank 4) 109

9.185 PCH_CHIP_TEMP Register – Index 01h (Bank 4) 109
9.186 PCH_CPU_TEMP_H Register – Index 02h (Bank 4) 109
9.187 PCH_CPU_TEMP_L Register – Index 03h (Bank 4) 110
9.188 PCH_MCH_TEMP Register – Index 04h (Bank 4) 110
9.189 PCH_DIM0_TEMP Register – Index 05h (Bank 4) 110
9.190 PCH_DIM1_TEMP Register – Index 06h (Bank 4) 111
9.191 PCH_DIM2_TEMP Register – Index 07h (Bank 4) 111
9.192 PCH_DIM3_TEMP Register – Index 08h (Bank 4) 111
9.193 PCH_TSI0_TEMP_H Register – Index 09h (Bank 4) 111
9.194 PCH_TSI0_TEMP_L Register – Index 0Ah (Bank 4) 112
9.195 PCH_TSI1_TEMP_H Register – Index 0Bh (Bank 4) 112
9.196 PCH_TSI1_TEMP_L Register – Index 0Ch (Bank 4) 112
9.197 PCH_TSI2_TEMP_H Register – Index 0Dh (Bank 4) 112
9.198 PCH_TSI2_TEMP_L Register – Index 0Eh (Bank 4) 113
9.199 PCH_TSI3_TEMP_H Register – Index 0Fh (Bank 4) 113
9.200 PCH_TSI3_TEMP_L Register – Index 10h (Bank 4) 113
9.201 PCH_TSI4_TEMP_H Register – Index 11h (Bank 4) 114
9.202 PCH_TSI4_TEMP_L Register – Index 12h (Bank 4) 114
9.203 PCH_TSI5_TEMP_H Register – Index 13h (Bank 4) 114
9.204 PCH_TSI5_TEMP_L Register – Index 14h (Bank 4) 114
9.205 PCH_TSI6_TEMP_H Register – Index 15h (Bank 4) 115
9.206 PCH_TSI6_TEMP_L Register – Index 16h (Bank 4) 115
9.207 PCH_TSI7_TEMP_H Register – Index 17h (Bank 4) 115
9.208 PCH_TSI7_TEMP_L Register – Index 18h (Bank 4) 115
9.209 ByteTemp_H Register – Index 19h (Bank 4) 116
9.210 ByteTemp_L Register – Index 1Ah (Bank 4) 116
9.211 Reserved Register – Index 1Bh ~ 22h (Bank 4) 116
9.212 Reserved Register – Index 23h (Bank 4) 116
9.213 Reserved Register – Index 24h (Bank 4) 116
9.214 Reserved Register – Index 25h (Bank 4) 116
9.215 Reserved Register – Index 26h (Bank 4) 116
9.216 AVCC High Limit Compared Voltage Register – Index 27h (Bank 4) 116
9.217 AVCC Low Limit Compared Voltage Register – Index 28h (Bank 4) 117
9.218 Reserved Register – Index 29h ~ 41h (Bank 4) 117
9.219 Voltage Comparation Interrupt Status Register - Index 42h (Bank 4) 117
9.220 Reserved Register – Index 43h ~ 49h (Bank 4) 117
9.221 Reserved Register – Index 4Ah (Bank 4) 117
9.222 Reserved Register – Index 4Bh (Bank 4) 117
9.223 VTIN0 Temperature Sensor Offset Register – Index 4Ch (Bank 4) 117
9.224 Reserved Register – Index 4Eh ~ 4Fh (Bank 4) 118
9.225 Interrupt Status Register 3 – Index 50h (Bank 4) 118
9.226 SMI# Mask Register 4 – Index 51h (Bank 4) 118
9.227 Reserved Register – Index 52h ~ 53h (Bank 4) 119
9.228 Reserved Register – Index 54h (Bank 4) 119
9.229 CPUTIN Temperature Sensor Offset Register – Index 55h (Bank 4) 119
9.230 AUXTIN0 Temperature Sensor Offset Register – Index 56h (Bank 4) 119
9.231 Reserved Register – Index 57h-58h (Bank 4) 119

9.232 Real Time Hardware Status Register I – Index 59h (Bank 4) 119
9.233 Real Time Hardware Status Register II – Index 5Ah (Bank 4) 120
9.234 Real Time Hardware Status Register III – Index 5Bh (Bank 4) 121
9.235 Reserved Register – Index 5Ch ~ 5Fh (Bank 4) 121
9.236 Reserved Register – Index 60h (Bank 4) 121
9.237 Reserved Register – Index 61h (Bank 4) 121
9.238 Reserved Register – Index 62h (Bank 4) 121
9.239 Reserved Register – Index 63h (Bank 4) 121
9.240 Reserved Register – Index 64h (Bank 4) 121
9.241 Reserved Register – Index 65h (Bank 4) 122
9.242 Reserved Register – Index 66h (Bank 4) 122
9.243 Reserved Register – Index 67h (Bank 4) 122
9.244 Reserved Register – Index 68h ~ 7Fh (Bank 4) 122
9.245 Value RAM — Index 80h ~ 96h (Bank 4) 122
9.246 (SYSFANIN) FANIN1 COUNT High-byte Register – Index B0h (Bank 4)..... 122
9.247 (SYSFANIN) FANIN1 COUNT Low-byte Register – Index B1h (Bank 4)..... 123
9.248 (CPUFANIN) FANIN2 COUNT High-byte Register – Index B2h (Bank 4) 123
9.249 (CPUFANIN) FANIN2 COUNT Low-byte Register – Index B3h (Bank 4) 123
9.250 Reserved Register – Index B4h (Bank 4) 123
9.251 Reserved Register – Index B5h (Bank 4) 123
9.252 Reserved Register – Index B6h (Bank 4) 124
9.253 Reserved Register – Index B7h (Bank 4) 124
9.254 Reserved Register – Index B8h (Bank 4) 124
9.255 Reserved Register – Index B9h (Bank 4) 124
9.256 Reserved Register – Index BAh ~ BFh (Bank 4) 124
9.257 SYSFANIN SPEED HIGH-BYTE VALUE (RPM) - Index C0h (Bank 4) 124
9.258 SYSFANIN SPEED LOW-BYTE VALUE (RPM) - Index C1h (Bank 4) 124
9.259 CPUFANIN SPEED HIGH-BYTE VALUE (RPM) – Index C2h (Bank 4) 124
9.260 CPUFANIN SPEED LOW-BYTE VALUE (RPM) – Index C3h (Bank 4) 125
9.261 Reserved Register – Index C4h (Bank 4) 125
9.262 Reserved Register – Index C5h (Bank 4) 125
9.263 Reserved Register – Index C6h (Bank 4) 125
9.264 Reserved Register – Index C7h (Bank 4) 125
9.265 Reserved Register – Index C8h (Bank 4) 125
9.266 Reserved Register – Index C9h (Bank 4) 125
9.267 Reserved Register – Index 00h ~ 53h (Bank 5) 125
9.268 Value RAM 2 — Index 50h-5Fh (Bank 5) 125
9.269 SMI# Mask Register 1 – Index 66h (Bank 5) 126
9.270 Interrupt Status Register – Index 67h (Bank 5) 126
9.271 Real Time Hardware Status Register – Index 68h (Bank 5) 126
9.272 Reserved Register – Index 69h ~ FFh (Bank 5) 127
9.273 Close-Loop Fan Control RPM mode Register – Index 00 (Bank 6) 127
9.274 SYSFAN RPM Mode Tolerance Register – Index 01 (Bank 6) 128
9.275 CPUFAN RPM Mode Tolerance Register – Index 02 (Bank 6) 128
9.276 Reserved Register – Index 03 (Bank 6) 128
9.277 Reserved Register – Index 04 (Bank 6) 128
9.278 Reserved Register – Index 05 (Bank 6) 128

9.279 Enable RPM High Mode Register – Index 00 (Bank 6) 128
9.280 SMIOVT1 Temperature Source Select Register – Index 21 (Bank 6) 129
9.281 SMIOVT2 Temperature Source Select Register – Index 22 (Bank 6) 130
9.282 Reserved Register – Index 23~39h (Bank 6) 130
9.283 (SYSFANIN) Fan Count Limit High-byte Register – Index 3Ah (Bank 6) 131
9.284 (SYSFANIN) Fan Count Limit Low-byte Register – Index 3Bh (Bank 6) 131
9.285 (CPUFANIN) Fan Count Limit High-byte Register – Index 3Ch (Bank 6) 131
9.286 (CPUFANIN) Fan Count Limit Low-byte Register – Index 3Dh (Bank 6) 131
9.287 Reserved Register – Index 3Eh (Bank 6) 132
9.288 Reserved Register – Index 3Fh (Bank 6) 132
9.289 Reserved Register – Index 40h (Bank 6) 132
9.290 Reserved Register – Index 41h (Bank 6) 132
9.291 Reserved Register – Index 42h (Bank 6) 132
9.292 Reserved Register – Index 43h (Bank 6) 132
9.293 SYSFANIN Revolution Pulses Selection Register – Index 44h (Bank 6) 132
9.294 CPUFANIN Revolution Pulses Selection Register – Index 45h (Bank 6) 132
9.295 Reserved Register – Index 46h (Bank 6) 133
9.296 Reserved Register – Index 47h (Bank 6) 133
9.297 Reserved Register – Index 48h (Bank 6) 133
9.298 Reserved Register – Index 49~FFh (Bank 6) 133
9.299 PECI Function Control Registers – Index 01 ~ 04h (Bank 7) 133
9.300 PECI Enable Function Register – Index 01h (Bank 7) 133
9.301 PECI Timing Config Register – Index 02h (Bank 7) 133
9.302 PECI Agent Config Register – Index 03h (Bank 7) 134
9.303 PECI Temperature Config Register – Index 04h (Bank 7) 134
9.304 PECI Command Write Date Registers – Index 05 ~ 1Eh (Bank 7) 135
9.305 PECI Command Address Register – Index 05h (Bank 7) 135
9.306 PECI Command Write Length Register – Index 06h (Bank 7) 135
9.307 PECI Command Read Length Register – Index 07h (Bank 7) 135
9.308 PECI Command Code Register – Index 08h (Bank 7) 136
9.309 PECI Command Tbase0 Register – Index 09h (Bank 7) 136
9.310 PECI Command Tbase1 Register – Index 0Ah (Bank 7) 136
9.311 PECI Command Write Data 1 Register – Index 0Bh (Bank 7) 137
9.312 PECI Command Write Data 2 Register – Index 0Ch (Bank 7) 137
9.313 PECI Command Write Data 3 Register – Index 0Dh (Bank 7) 137
9.314 PECI Command Write Data 4 Register – Index 0Eh (Bank 7) 137
9.315 PECI Command Write Data 5 Register – Index 0Fh (Bank 7) 138
9.316 PECI Command Write Data 6 Register – Index 10h (Bank 7) 138
9.317 PECI Command Write Data 7 Register – Index 11h (Bank 7) 138
9.318 PECI Command Write Data 8 Register – Index 12h (Bank 7) 138
9.319 PECI Command Write Data 9 Register – Index 13h (Bank 7) 139
9.320 PECI Command Write Data 10 Register – Index 14h (Bank 7) 139
9.321 PECI Command Write Data 11 Register – Index 15h (Bank 7) 139
9.322 PECI Command Write Data 12 Register – Index 16h (Bank 7) 140
9.323 PECI Agent Relative Temperature Register (ARTR) – Index 17h-1Eh (Bank 7) 140
9.324 PECI Command Read Date Registers – Index 1F ~ 32h (Bank 7) 141
9.325 PECI Alive Agent Register – Index 1Fh (Bank 7) 141

9.326 PECI Temperature Reading Register (Integer) – Index 20h (Bank 7)..... 142
9.327 PECI Temperature Reading Register (Fraction) – Index 21h (Bank 7)..... 142
9.328 PECI Command TN Count Value Register – Index 22h (Bank 7)..... 142
9.329 PECI Command TN Count Value Register – Index 23h (Bank 7)..... 143
9.330 PECI Command Warning Flag Register – Index 24h (Bank 7) 143
9.331 PECI Command FCS Data Register – Index 25h (Bank 7)..... 143
9.332 PECI Command WFCS Data Register – Index 26h (Bank 7) 144
9.333 PECI RFCS Data Register – Index 27h (Bank 7)..... 144
9.334 PECI AWFCS Data Register – Index 28h (Bank 7)..... 144
9.335 PECI CRC OUT WFCS Data Register – Index 29h (Bank 7)..... 145
9.336 PECI Command Read Data 1 Register – Index 2Ah (Bank 7) 145
9.337 PECI Command Read Data 2 Register – Index 2Bh (Bank 7) 145
9.338 PECI Command Read Data 3 Register – Index 2Ch (Bank 7)..... 145
9.339 PECI Command Read Data 4 Register – Index 2Dh (Bank 7)..... 146
9.340 PECI Command Read Data 5 Register – Index 2Eh (Bank 7) 146
9.341 PECI Command Read Data 6 Register – Index 2Fh (Bank 7) 146
9.342 PECI Command Read Data 7 Register – Index 30h (Bank 7) 147
9.343 PECI Command Read Data 8 Register – Index 31h (Bank 7) 147
9.344 PECI Command Read Data 9 Register – Index 32h (Bank 7) 147
9.345 Reserved Register – Index 00h (Bank 8) 149
9.346 Reserved Register – Index 01h (Bank 8) 149
9.347 Reserved Register – Index 02h (Bank 8) 149
9.348 Reserved Register – Index 03h (Bank 8) 149
9.349 Reserved Register – Index 04h (Bank 8) 149
9.350 Reserved Register – Index 05h (Bank 8) 149
9.351 Reserved Register – Index 06h (Bank 8) 150
9.352 Reserved Register – Index 07h (Bank 8) 150
9.353 Reserved Register – Index 08h (Bank 8) 150
9.354 Reserved Register – Index 09h (Bank 8) 150
9.355 Reserved Register – Index 0Ch (Bank 8)..... 150
9.356 Reserved Register – Index 0Dh (Bank 8)..... 150
9.357 Reserved Register – Index 20h (Bank 8) 150
9.358 Reserved Register – Index 21h (Bank 8) 150
9.359 Reserved Register – Index 22h (Bank 8) 150
9.360 Reserved Register – Index 23h (Bank 8) 150
9.361 Reserved Register – Index 24h (Bank 8) 150
9.362 Reserved Register – Index 25h~26h (Bank 8) 150
9.363 Reserved Register – Index 27h (Bank 8) 150
9.364 Reserved Register – Index 28h (Bank 8) 150
9.365 Reserved Register – Index 29h (Bank 8) 150
9.366 Reserved Register – Index 2Ah (Bank 8)..... 150
9.367 Reserved Register – Index Index 2Bh~30h (Bank 8)..... 150
9.368 Reserved Register – Index 31h (Bank 8) 150
9.369 Reserved Register – Index 32h~34h(Bank 8) 150
9.370 Reserved Register – Index 35h (Bank 8) 150
9.371 Reserved Register – Index 36h (Bank 8) 150
9.372 Reserved Register – Index 37h (Bank 8) 151

9.373 Reserved Register – Index 38h (Bank 8) 151
9.374 Reserved Register – Index 39h (Bank 8) 151
9.375 Reserved Register – Index 3Ah (Bank 8) 151
9.376 Reserved Register – Index 3Bh (Bank 8) 151
9.377 Reserved Register – Index 3Ch (Bank 8) 151
9.378 Reserved Register – Index 3Dh (Bank 8) 151
9.379 Reserved Register – Index 3Eh (Bank 8) 151
9.380 Reserved Register – Index 3Fh (Bank 8) 151
9.381 Reserved Register – Index 40h (Bank 8) 151
9.382 Reserved Register – Index 41h (Bank 8) 151
9.383 Reserved Register – Index 42h ~ FFh (Bank 8) 151
9.384 Reserved Register – Index 00h (Bank 9) 151
9.385 Reserved Register – Index 01h (Bank 9) 151
9.386 Reserved Register – Index 02h (Bank 9) 151
9.387 Reserved Register – Index 03h (Bank 9) 151
9.388 Reserved Register – Index 04h (Bank 9) 151
9.389 Reserved Register – Index 05h (Bank 9) 151
9.390 Reserved Register – Index 06h (Bank 9) 151
9.391 Reserved Register – Index 07h (Bank 9) 151
9.392 Reserved Register – Index 08h (Bank 9) 151
9.393 Reserved Register – Index 09h (Bank 9) 152
9.394 Reserved Register – Index 0Ch (Bank 9) 152
9.395 Reserved Register – Index 0Dh (Bank 9) 152
9.396 Reserved Register – Index 20h (Bank 9) 152
9.397 Reserved Register – Index 21h (Bank 9) 152
9.398 Reserved Register – Index 22h (Bank 9) 152
9.399 Reserved Register – Index 23h (Bank 9) 152
9.400 Reserved Register – Index 24h (Bank 9) 152
9.401 Reserved Register – Index 25h~26h (Bank 9) 152
9.402 Reserved Register – Index 27h (Bank 9) 152
9.403 Reserved Register – Index 28h (Bank 9) 152
9.404 Reserved Register – Index 29h (Bank 9) 152
9.405 Reserved Register – Index 2Ah (Bank 9) 152
9.406 Reserved Register – Index Index 2Bh~30h (Bank 9) 152
9.407 Reserved Register – Index 31h (Bank 9) 152
9.408 Reserved Register – Index 32h~34h(Bank 9) 152
9.409 Reserved Register – Index 35h (Bank 9) 152
9.410 Reserved Register – Index 36h (Bank 9) 152
9.411 Reserved Register – Index 37h (Bank 9) 152
9.412 Reserved Register – Index 38h (Bank 9) 152
9.413 Reserved Register – Index 39h (Bank 9) 152
9.414 Reserved Register – Index 3Ah (Bank 9) 153
9.415 Reserved Register – Index 3Bh (Bank 9) 153
9.416 Reserved Register – Index 3Ch (Bank 9) 153
9.417 Reserved Register – Index 3Dh (Bank 9) 153
9.418 Reserved Register – Index 3Eh (Bank 9) 153
9.419 Reserved Register – Index 3Fh (Bank 9) 153

9.420 Reserved Register – Index 40h (Bank 9) 153
9.421 Reserved Register – Index 41h (Bank 9) 153
9.422 Reserved Register – Index 42h ~ FFh (Bank 9) 153
10. UART PORT 154
10.1 UART Control Register (UCR) (Read/Write) 154
10.2 UART Status Register (USR) (Read/Write) 156
10.3 Handshake Control Register (HCR) (Read/Write) 156
10.4 Handshake Status Register (HSR) (Read/Write) 157
10.5 UART FIFO Control Register (UFR) (Write only) 158
10.6 Interrupt Status Register (ISR) (Read only) 158
10.7 Interrupt Control Register (ICR) (Read/Write) 159
10.8 Programmable Baud Generator (BLL/BHL) (Read/Write) 160
10.9 User-defined Register (UDR) (Read/Write) 160
10.10 UART RS485 Auto Flow Control 161
11. KEYBOARD CONTROLLER 162
11.1 Output Buffer 162
11.2 Input Buffer 162
11.3 Status Register 163
11.4 Commands 164
11.5 Hardware GATEA20/Keyboard Reset Control Logic 166
11.5.1 KB Control Register (Logic Device 5, CR-F0) 166
11.5.2 Port 92 Control Register (Default Value = 0x24) 167
12. CONSUMER INFRARED REMOTE (CIR) 168
12.1 CIR Register Table 168
12.1.1 IR Configuration Register – Base Address + 0 168
12.1.2 IR Status Register – Base Address + 1 169
12.1.3 IR Interrupt Configuration Register – Base Address + 2 169
12.1.4 RX FIFO Count– Base Address + 5 170
12.1.5 IR TX Carrier Prescalar Configuration Register (CP) – Base Address + 4 170
12.1.6 IR TX Carrier Period Configuration Register (CC) – Base Address + 5 171
12.1.7 IR RX Sample Limited Count High Byte Register (RCLCH) – Base Address + 6 171
12.1.8 IR RX Sample Limited Count Low Byte Register (RCLCL) – Base Address + 7 171
12.1.9 IR FIFO Configuration Register (FIFOCON) – Base Address + 8 171
12.1.10 IR Sample RX FIFO Status Register – Base Address + 9 172
12.1.11 IR Sample RX FIFO Register – Base Address + A 173
12.1.12 TX FIFO Count– Base Address + 5 173
12.1.13 IR Sample TX FIFO Register – Base Address + C 173
12.1.14 IR Carrier Count High Byte Register – Base Address + D 174
12.1.15 IR Carrier Count Low Byte Register – Base Address + E 174
12.1.16 IR FSM Status Register (IRFSM) – Base Address + F 174
12.1.17 IR Minimum Length Register – Base Address + F 175
13. CONSUMER INFRARED REMOTE (CIR) WAKE-UP 176
13.1 CIR WAKE-UP Register Table 176
13.1.1 IR Configuration Register – Base Address + 0 176
13.1.2 IR Status Register – Base Address + 1 177
13.1.3 IR Interrupt Configuration Register – Base Address + 2 177
13.1.4 IR TX Configuration Register – Base Address + 3 178

13.1.5 IR FIFO Compare Tolerance Configuration Register – Base Address + 4 178
13.1.6 RX FIFO Count– Base Address + 5....178
13.1.7 IR RX Sample Limited Count High Byte Register (RCLCH) – Base Address + 6 179
13.1.8 IR RX Sample Limited Count Low Byte Register (RCLCL) – Base Address + 7 179
13.1.9 IR FIFO Configuration Register (FIFOCON) – Base Address + 8 179
13.1.10 IR Sample RX FIFO Status Register – Base Address + 9 180
13.1.11 IR Sample RX FIFO Register – Base Address + A 180
13.1.12 Write FIFO – Base Address + B....180
13.1.13 Read FIFO Only – Base Address + C....181
13.1.14 Read FIFO Index – Base Address + D 181
13.1.15 Reserved – Base Address + E....181
13.1.16 IR FSM Status Register (IRFSM) – Base Address + F 182
13.1.17 IR Minimum Length Register – Base Address + F....182
14. POWER MANAGEMENT EVENT.... 183
14.1 Power Control Logic 183
14.1.1 PSON# Logic....184
14.1.2 AC Power Failure Resume 184
14.2 Wake Up the System by Keyboard and Mouse.... 185
14.2.1 Waken up by Keyboard events....186
14.2.2 Waken up by Mouse events 186
14.3 Resume Reset Logic 187
15. SERIALIZED IRQ.... 188
15.1 Start Frame.... 188
15.2 IRQ/Data Frame.... 189
15.3 Stop Frame 189
16. WATCHDOG TIMER.... 191
17. GENERAL PURPOSE I/O.... 192
17.1 GPIO ARCHITECTURE.... 192
17.2 ACCESS CHANNELS 195
18. SMBUS MASTER INTERFACE.... 196
18.1 General Description 196
18.2 Introduction to the SMBus Master 196
18.2.1 Data Transfer Format 196
18.2.2 Arbitration 196
18.2.3 Clock Synchronization 197
18.3 SB-TSI 198
18.3.1 SB-TSI Address....198
18.4 PCH 198
18.4.1 Command Summary....198
18.5 SMBus Master 199
18.5.1 Block Diagram 199
18.5.2 Programming Flow 200
18.5.3 TSI Routine....201
18.5.4 PCH Routine....201
18.5.5 BYTE Ruttine....202
18.5.6 Manual Mode interface 202
18.6 Register Type Abbreviations.... 203

18.6.1 Enter the Extended Function Mode 203
18.6.2 Configure the Configuration Registers....204
18.7 SMBus Master Register Set 204
18.7.1 SMBus Register Map....204
18.7.2 SMBus Data (SMDATA) – Bank 0 204
18.7.3 SMBus Write Data Size (SMWRSIZE) – Bank 0 205
18.7.4 SMBus Command (SMCMD) – Bank 0....205
18.7.5 SMBus INDEX (SMIDX) – Bank 0 206
18.7.6 SMBus Control (SMCTL) – Bank 0....206
18.7.7 SMBus Address (SMADDR) – Bank 0....207
18.7.8 SCL FREQ (SCLFREQ) – Bank 0 207
18.7.9 PCH Address (PCHADDR) – Bank 0....208
18.7.10 SMBus Error Status (Error_status) – Bank 0 208
18.7.11 PCH Command (PCHCMD) – Bank 0....209
18.7.12 TSI Agent Enable Register (TSI_AGENT) – Bank 209
18.7.13 SMBus Control 3 Register (SMCTL3) – Bank 0....210
18.7.14 SMBus Control 2 Register (SMCTL2) – Bank 0....210
18.7.15 BYTE ADDRESS (BYTE ADDR) – Bank 0 211
18.7.16 BYTE INDEX_H (BYTE_IDX_H) – Bank 0....211
18.7.17 BYTE INDEX_L (BYTE_IDX_L) – Bank 0....212
19. CONFIGURATION REGISTER.... 213
19.1 Chip (Global) Control Register.... 213
19.2 Logical Device 2 (UART A).... 223
19.3 Logical Device 3 (IR) 225
19.4 Logical Device 5 (Keyboard Controller).... 227
19.5 Logical Device 6 (CIR).... 229
19.6 Logical Device 7 (GPIO7, GPIO8) 231
19.7 Logical Device 8 (WDT1).... 235
19.8 Logical Device 9 (GPIO2, GPIO4, GPIO5, GPIO7, GPIO8).... 237
19.9 Logical Device A (ACPI) 242
19.10 Logical Device B (Hardware Monitor, Front Panel LED) 251
19.11 Logical Device D (WDT1) 257
19.12 Logical Device E (CIR WAKE-UP).... 258
19.13 Logical Device F (GPIO Push-pull or Open-drain selection) 259
19.14 Logical Device 16 (Deep Sleep) 261
20. SPECIFICATIONS 263
20.1 Absolute Maximum Ratings 263
20.2 DC CHARACTERISTICS.... 263
21. A C CHARACTERISTICS 266
21.1 Power On / Off Timing 266
21.2 AC Power Failure Resume Timing 267
21.3 Clock Input Timing 270
21.4 PECI Timing.... 271
21.5 SMBus Timing.... 272
21.6 UART 273
21.7 Modem Control Timing 274
21.7.1 Writing Cycle Timing....275

21.7.2 Read Cycle Timing 275
21.7.3 Send Data to K/B 275
21.7.4 Receive Data from K/B 276
21.7.5 Input Clock 276
21.7.6 Send Data to Mouse 276
21.7.7 Receive Data from Mouse 276
21.8 GPIO Timing Parameters 277
21.8.1 GPIO Write Timing 277
22. TOP MARKING SPECIFICATIONS 278
23. ORDERING INFORMATION 279
24. PACKAGE SPECIFICATION 280
25. REVISION HISTORY 282

LIST OF FIGURES

Figure 3-1 NCT5532D Block Diagram 5
Figure 4-1 NCT5532D Pin Layout 6
Figure 6-1 RSMRST# 17
Figure 6-2 PWROK 18
Figure 6-3 RSTOUTX# and LRESET# 18
Figure 6-4 BKFD_CUT and LATCH_BKFD_CUT 19
Figure 6-5 3VSBSW# 20
Figure 6-6 PSON# Block Diagram 21
Figure 6-7 PWROK Block Diagram 22
Figure 6-8 Illustration of Dual Color LED application 23
Figure 6-9 Illustration of LED polarity 25
Figure 6-10 ASSC Application Diagram 28
Figure 7-1 Structure of the Configuration Register 35
Figure 7-2 Configuration Register 37
Figure 8-1 LPC Bus' Reads from / Write to Internal Registers 40
Figure 8-2 Serial Bus Write to Internal Address Register Followed by the Data Byte 41
Figure 8-3 Serial Bus Read from Internal Address Register 41
Figure 8-4 Analog Inputs and Application Circuit of the NCT5532D 42
Figure 8-5 Monitoring Temperature from Thermistor 44
Figure 8-6 Monitoring Temperature from Thermal Diode (Voltage Mode) 45
Figure 8-7 Monitoring Temperature from Thermal Diode (Current Mode) 45
Figure 8-8 PECI Temperature 46
Figure 8-9 Temperature and Fan Speed Relation after Tbase Offsets 47
Figure 8-10 SMART FAN^{TM} Function Block Diagram 50
Figure 8-11 Thermal Cruise^{TM} Mode Parameters Figure 51
Figure 8-12 Mechanism of Thermal Cruise^{TM} Mode (PWN Duty Cycle) 51
Figure 8-13 Mechanism of Thermal Cruise^{TM} Mode (DC Output Voltage) 52
Figure 8-14 Mechanism of Fan Speed Cruise^{TM} Mode 52
Figure 8-15 SMART FAN^{TM} IV & Close Loop Fan Control Mechanism 55
Figure 8-16 Fan Control Duty Mode Programming Flow 55
Figure 8-17 Close-Loop Fan Control RPM mode Programming Flow 56
Figure 8-18 CPUFAN SMART FAN^{TM} IV Table Parameters Figure 57
Figure 8-19 Fanout Step Relation of CPUFANOUT 57
Figure 8-20 SYS TEMP and Weight Value Relations 58
Figure 8-21 Fan Control Weighting Duty Mode Programming Flow 59
Figure 8-22 SMI Mode of Voltage and Fan Inputs 60
Figure 8-23 Shut-down Interrupt Mode 61
Figure 8-24 SMI Mode 61
Figure 8-25 SMI Mode of SYSTIN II 62
Figure 8-26 Shut-down Interrupt Mode 63
Figure 8-27 SMI Mode of CPUTIN 63
Figure 8-28 OVT# Modes of Temperature Inputs 65

Figure 12-1 Keyboard and Mouse Interface 162
Figure 14-1 Power Control Mechanism 183
Figure 14-2 Power Sequence from S5 to S0, then Back to S5 184
Figure 14-3 The previous state is “on” 185
Figure 14-4 The previous state is “off”. 185
Figure 14-5 Mechanism of Resume Reset Logic 187
Figure 15-1 Start Frame Timing with Source Sampled A Low Pulse on IRQ1 188
Figure 15-2 Stop Frame Timing with Host Using 17 SERIRQ Sampling Period 190
Figure 18-1 Data Transfer Format 196
Figure 18-2 SMBus Arbitration 197
Figure 18-3 Clock synchronization 197
Figure 18-4 SMBus Master Block Diagram 199
Figure 18-5 Programming Flow 200
Figure 18-6 TSI Routine 201
Figure 18-7 PCH Routine 201
Figure 18-8 PCH Routine 202
Figure 18-9 Manual Mode Programming Flow 203

LIST OF TABLES

Table 6-1 Pin Description 17
Table 7-1 Devices of I/O Base Address 36
Table 8-1 Temperature Data Format 44
Table 8-2 Relative Registers – at Thermal CruiseTM Mode 53
Table 8-3 Relative Registers – at Speed CruiseTM Mode 53
Table 8-4 Relative Register-at SMART FAN^{TM} IV Control Mode 54
Table 8-5 Relative Register-at Weight Value Control 58
Table 8-6 Relative Register of SMI functions 64
Table 8-7 Relative Register of OVT functions 64
Table 10-1 Register Summary for UART 155
Table 12-1 Bit Map of Status Register 163
Table 12-2 KBC Command Sets 164
Table 12-1 CIR Register Table 168
Table 14-1 Bit Map of Logical Device A, CR[E4h], Bits[6:5] 184
Table 14-2 Definitions of Mouse Wake-Up Events 186
Table 14-3 Timing and Voltage Parameters of RSMRST# 187
Table 15-1 SERIRQ Sampling Periods 189
Table 17-1 Relative Control Registers of GPIO 41 that Support Wake-Up Function 192
Table 17-2 GPIO Group Programming Table 192
Table 17-3 GPIO Register Addresses 195
Table 18-1 SB-TSI Address Encoding 198
Table 18-2 PCH Command Summary 198
Table 18-3 SMBus Master Bank 0 Registers 204

1. GENERAL DESCRIPTION

The NCT5532D is a member of Nuvoton's Super I/O product line. The NCT5532D monitors several critical parameters in PC hardware, including power supply voltages, fan speeds and temperatures. In terms of temperature monitoring, the NCT5532D adopts the Current Mode (dual current source) and thermistor sensor approach. The NCT5532D also supports the Smart Fan control system, including "SMART FAN™ I and SMART FAN™ IV, which makes the system more stable and user-friendly.

The NCT5532D provides one high-speed serial communication port (UART), which includes a 16-byte send/receive FIFO, a programmable baud rate generator, complete modem-control capability and a processor interrupt system. The UART supports legacy speeds up to 115.2K bps as well as even higher baud rates of 230K, 460K, or 921K bps to support higher speed modems. The NCT5532D supports keyboard and mouse interface which is 8042-based keyboard controller.

The NCT5532D provides flexible I/O control functions through a set of general purpose I/O (GPIO) ports. These GPIO ports may serve as simple I/O ports or may be individually configured to provide alternative functions.

The NCT5532D supports the Intel® PECI (Platform Environment Control Interface), AMD® SB-TSI interface, AMD® CPU power on sequence, and also partial Intel® Deep Sleep Well glue logic to help customers to reduce the external circuits needed while using Deep Sleep Well function.

The NCT5532D supports two-color LED control to indicate system power states, Consumer IR function for remote control purpose, and also Advanced Power Saving function to further reduce the power consumption.

The configuration registers inside the NCT5532D support mode selection, function enable and disable, and power-down selection. Furthermore, the configurable PnP features are compatible with the plug-and-play feature in Windows, making the allocation of the system resources more efficient than ever.

2. FEATURES

General

Meet LPC Specification 1.1
SERIRQ (Serialized IRQ)
Integrated hardware monitor functions
Support DPM (Device Power Management), ACPI (Advanced Configuration and Power Interface)
Programmable configuration settings
Single 24-MHz or 48-MHz clock input
Support selective pins of 5 V tolerance

UART

One high-speed, 16550-compatible UART with 16-byte send / receive FIFO
Support RS485
--- Supports auto flow control
Fully programmable serial-interface characteristics:
--- 5, 6, 7 or 8-bit characters
--- Even, odd or no parity bit generation / detection
--- 1, 1.5 or 2 stop-bit generation
Internal diagnostic capabilities:
--- Loop-back controls for communications link fault isolation
--- Break, parity, overrun, framing error simulation
Programmable baud rate generator allows division of clock source by any value from 1 to (2^{16}-1)
Maximum baud rate for clock source 14.769 MHz is up to 921K bps. The baud rate at 24 MHz is 1.5 M bps.

Keyboard Controller

8042-based keyboard controller
Asynchronous access to two data registers and one status register
Software-compatible with 8042
Support PS/2 mouse
Support Port 92
Support both interrupt and polling modes
Fast Gate A20 and Hardware Keyboard Reset
12MHz operating frequency

Hardware Monitor Functions

Two remote temperature sensor inputs
Programmable threshold temperature to speed fan fully while current temperature exceeds this threshold in the Thermal Cruise™ mode
Support Current Mode (dual current source) temperature sensing method
Up to eight voltage inputs (CPUVCORE, VIN2, VIN3, VIN4, 3VCC, AVCC, 3VSB and VBAT)
Support Smart Fan I and Smart Fan IV
Two fan-speed monitoring inputs

Two fan-speed controls
Programmable hysteresis and setting points for all monitored items
Issue SMI# and OVT# (Over-temperature) to activate system protection via GPIO pins
Nuvoton Health Manager support
Provide I^2C master / slave interface to read / write registers

CIR and IR (Infrared)

Support IrDA version 1.0 SIR protocol with maximum baud rate up to 115.2K bps
Support SHARP ASK-IR protocol with maximum baud rate up to 57,600 bps
Support Consumer IR, including CIRTX and CIRRX

General Purpose I/O Ports

Programmable general purpose I/O ports
Two access channels, indirect (via 2E/2F or 4E/4F) and direct (Base Address) access.

ACPI Configuration

Support Glue Logic functions
Support general purpose Watch Dog Timer functions via GPIO pins

OnNow Functions

Keyboard Wake-Up by programmable keys
Mouse Wake-Up by programmable buttons
OnNow Wake-Up from all of the ACPI sleeping states (S1-S5)

PECI Interface

Support PECI 1.1, 2.0 and 3.0 specification
Support 2 CPU addresses and 2 domains per CPU address

AMD SB-TSI Interface

Support AMD® SB-TSI specification

SMBus Interface

Support SMBus Slave interface to report Hardware Monitor device data
Support SMBus Master interface to get thermal data from PCH
Support SMBus Master interface to get thermal data from MXM module

AMD® CPU Power on Srquence

Support AMD® CPU power on sequence

Advanced Power Saving

Advanced Sleep State Control to save motherboard Stand-by power consumption

Operation voltage

3.3 voltage

Package

64-pin LQFP

Green

3. BLOCK DIAGRAM

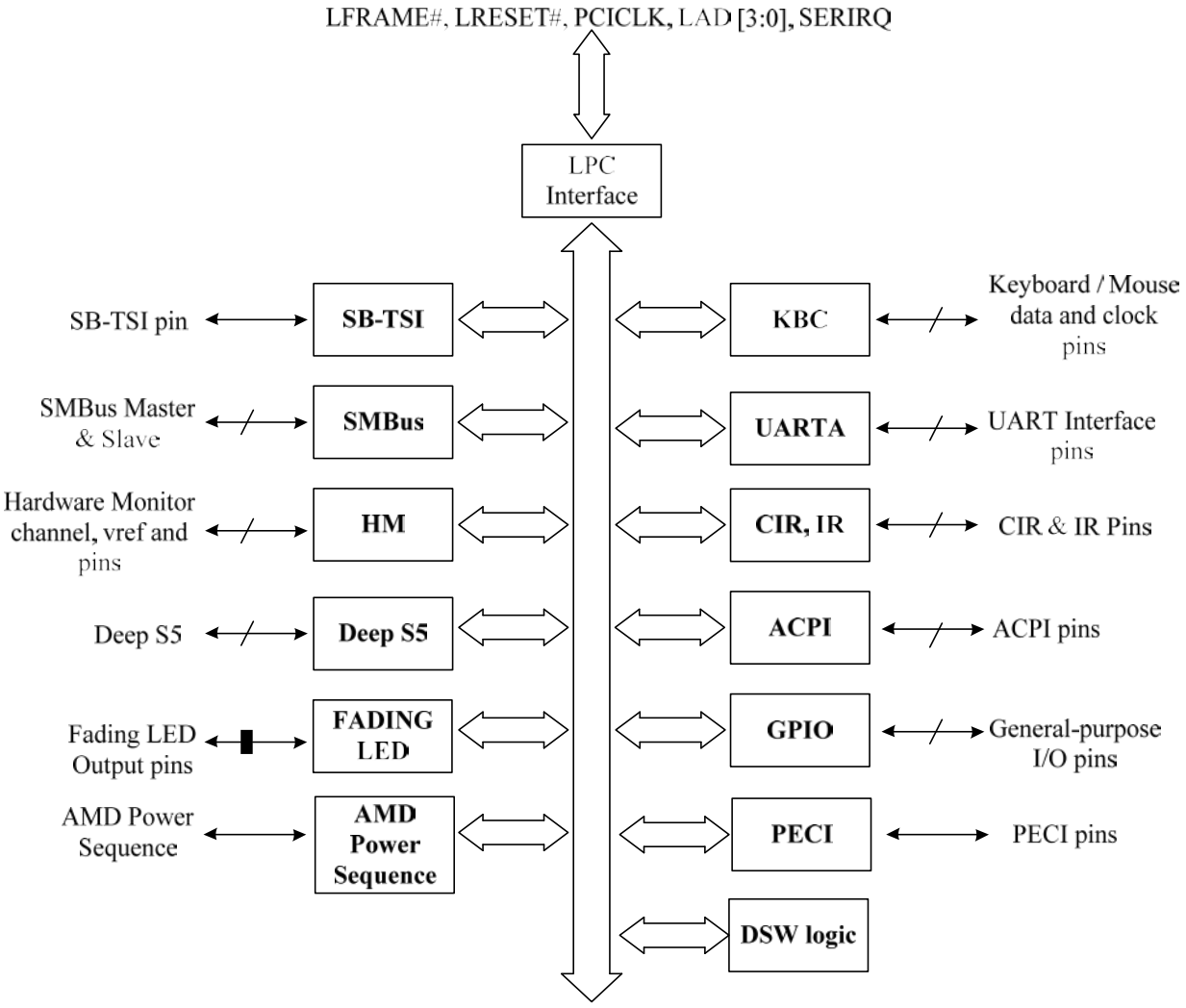

Figure 3-1 NCT5532D Block Diagram

4. PIN LAYOUT

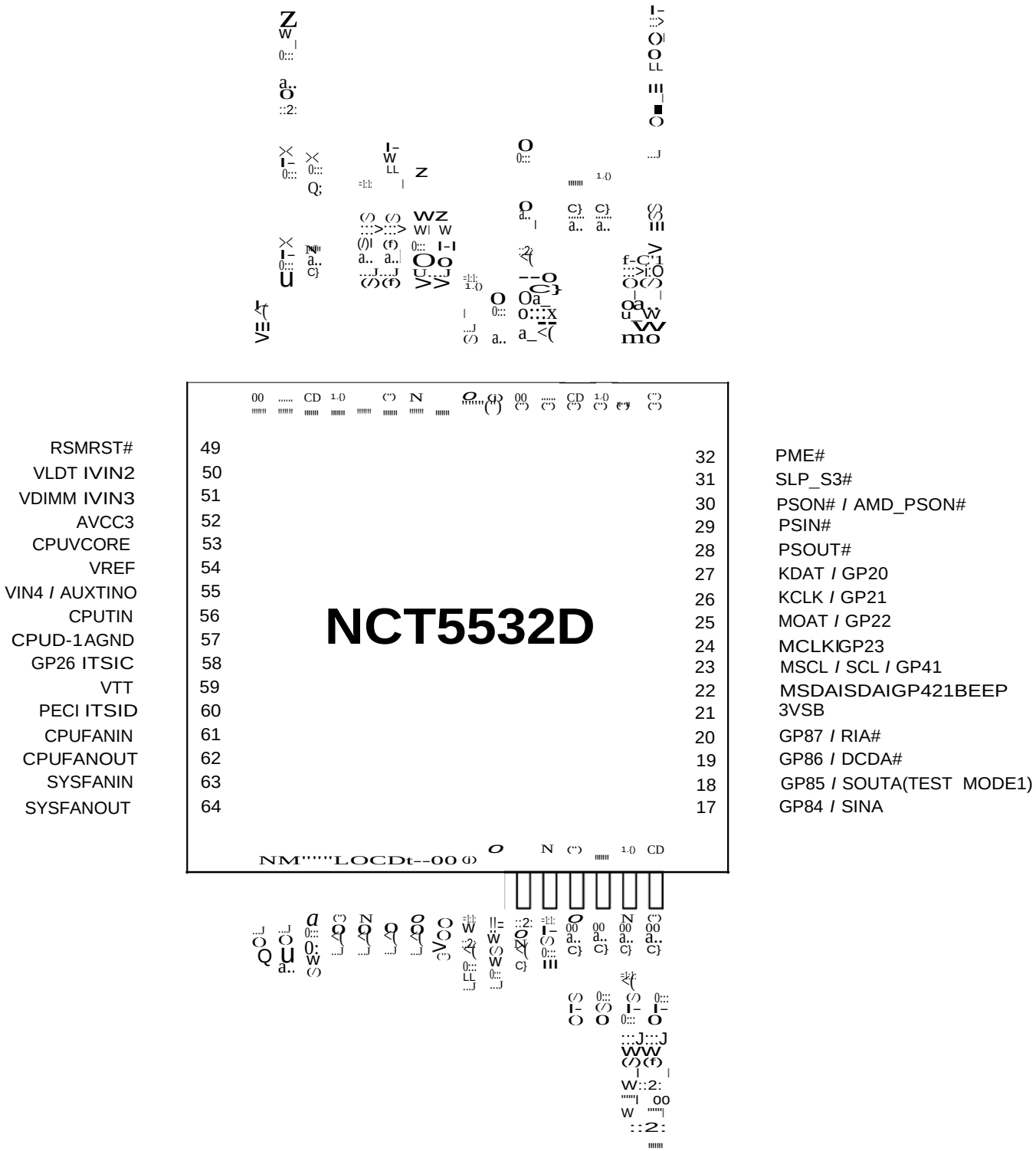

Figure 4-1 NCT5532D Pin Layout

5. PIN DESCRIPTION

AOUT	- Analog output pin
AIN	- Analog input pin
IN_{tp3}	- 3.3V TTL-level input pin
IN_{tsp3}	- 3.3V TTL-level, Schmitt-trigger input pin
IN_{gp5}	- 5V GTL-level input pin
IN_{tp5}	- 5V TTL-level input pin
IN_{tscup5}	- 5V TTL-level, Schmitt-trigger, input buffer with controllable pull-up
IN_{tsp5}	- 5V TTL-level, Schmitt-trigger input pin
IN_{tdp5}	- 5V TTL-level input pin with internal pull-down resistor
O_8	- output pin with 8-mA source-sink capability
OD_8	- open-drain output pin with 8-mA sink capability
O_{12}	- output pin with 12-mA source-sink capability
OD_{12}	- open-drain output pin with 12-mA sink capability
O_{24}	- output pin with 24-mA source-sink capability
OD_{24}	- open-drain output pin with 24-mA sink capability
O_{48}	- output pin with 48-mA source-sink capability
OD_{48}	- open-drain output pin with 48-mA sink capability
I/O_{v3}	- Bi-direction pin with source capability of 6 mA and sink capability of 1 mA
I/O_{v4}	- Bi-direction pin with source capability of 6 mA
O_{12cu}	- output pin 12-mA source-sink capability with controllable pull-up
OD_{12cu}	- open-drain 12-mA sink capability output pin with controllable pull-up

5.1 LPC Interface

PIN	SYMBOL	I/O	BUFFER TYPE	POWER WELL	DESCRIPTION
1	IOCLK	I	IN_{tp3}	VCC	System clock input, either 24MHz or 48MHz. The actual frequency must be specified in the register. The default value is 48MHz.
32	PME#	O	OD_{12}	VSB	Generated PME event.
2	PCICLK	I	IN_{tsp3}	VCC	PCI-clock 33-MHz input.
3	SERIRQ	I/O	I/O_{12tp3}	VCC	Serialized IRQ input / output.
4-7	LAD[3:0]	I/O	I/O_{12tp3}	VCC	These signal lines communicate address, control, and data information over the LPC bus between a host and a peripheral.
9	LFRAME#	I	IN_{tsp3}	VCC	Indicates the start of a new cycle or the termination of a broken cycle.
10	LRESET#	I	IN_{tsp3}	VCC	Reset signal. It can be connected to the PCIRST# signal on the host.

5.2 Serial Port Interface

PIN	SYMBOL	I/O	BUFFER TYPE	POWER WELL	DESCRIPTION
20	RIA#	I	IN_t	VCC	Ring Indicator. An active-low signal indicates that a ring signal is being received from the modem or the data set.
19	DCDA#	I	Int	VCC	Data Carrier Detection. An active-low signal indicates the modem or data set has detected a data carrier.
18	SOUTA	O	O_8	VCC	UART A Serial Output. This pin is used to transmit serial data out to the communication link.
17	SINA	I	IN_t	VCC	Serial Input. This pin is used to receive serial data through the communication link.
16	DTRA#	O	O_8	VCC	UART A Data Terminal Ready. An active-low signal informs the modem or data set that the controller is ready to communicate.
15	RTSA#	O	O_8	VCC	UART A Request To Send. An active-low signal informs the modem or data set that the controller is ready to send data.
14	DSRA#	I	IN_t	VCC	Data Set Ready. An active-low signal indicates the modem or data set is ready to establish a communication link and transfer data to the UART.
13	CTSA#	I	IN_t	VCC	Clear To Send. This is the modem-control input. The function of these pins can be tested by reading bit 4 of the handshake status register.

5.3 KBC Interface

PIN	SYMBOL	I/O	BUFFER TYPE	POWER WELL	DESCRIPTION
11	GA20M	O	O_{12}	VCC	Gate A20 output. This pin is high after system reset. (KBC P21)
12	KBRST#	O	O_{12}	VCC	Keyboard reset. This pin is high after system reset. (KBC P20)
26	KCLK	I/O	IN_{tsp5} OD_{12}	VSB	Keyboard Clock.
27	KDAT	I/O	IN_{tsp5} OD_{12}	VSB	Keyboard Data.
24	MCLK	I/O	IN_{tsp5} OD_{12}	VSB	PS2 Mouse Clock.
25	MDAT	I/O	IN_{tsp5} OD_{12}	VSB	PS2 Mouse Data.

5.4 CIR Interface

PIN	SYMBOL	I/O	BUFFER TYPE	POWER WELL	DESCRIPTION
46	CIRRX	I	IN_{tsp5}	VSB	CIR input for long length
47	CIRTX1	O	O_{12}	VSB	CIR transmission output

5.5 Hardware Monitor Interface

PIN	SYMBOL	I/O	BUFFER TYPE	POWER WELL	DESCRIPTION
50	VIN2	I	AIN	AVCC3	Analog input for voltage measurement (Range: 0 to 2.048 V)
51	VIN3	I	AIN	AVCC3	Analog input for voltage measurement (Range: 0 to 2.048 V)
53	CPUVCORE	I	AIN	AVCC3	Analog input for voltage measurement (Range: 0 to 2.048 V)
54	VREF	O	AOUT	AVCC3	Reference Voltage (around 2.048 V).
55	VIN4 / AUXTIN0	I	AIN	AVCC3	Analog input for voltage measurement (Range: 0 to 2.048V)
56	CPUTIN	I	AIN	AVCC3	The input of temperature sensor 2. It is used for CPU temperature sensing.
61	CPUFANIN	I	IN_{tsp5}	VCC	0 to +5 V amplitude fan tachometer input.
62	CPUFANOUT	O	O_{12} OD_{12}	VCC	PWM duty-cycle signal for fan speed control.
63	SYSFANIN	I	IN_{tsp5}	VCC	0 to +5 V amplitude fan tachometer input.

PIN	SYMBOL	I/O	BUFFER TYPE	POWER WELL	DESCRIPTION
64	SYSFANOUT	O	AOUT O_{12} OD_{12}	VCC	PWM duty-cycle signal for fan speed control. DC voltage output for fan speed control.
22	BEEP	O	OD_{12}	VSB	Beep function for hardware monitor.

5.6 Intel® PECI Interface

PIN	SYMBOL	I/O	BUFFER TYPE	POWER WELL	DESCRIPTION
60	PECI	I/O	I/O_{V3}	Vtt	INTEL® CPU PECI interface. Connect to CPU.
59	VTT	I	Power	Vtt	INTEL® CPU Vtt Power.

5.7 Advanced Configuration & Power Interface

PIN	SYMBOL	I/O	BUFFER TYPE	POWER WELL	DESCRIPTION
29	PSIN#	I	IN_{tp5}	VSB	Panel Switch Input. This pin is active-low with an internal pulled-up resistor.
28	PSOUT#	O	OD_{12}	VSB	Panel Switch Output. This signal is used to wake-up the system from S3/S5 state.
49	RSMRST#	O	OD_{12}	VRTC	Resume reset signal output.
31	SLP_S3#	I	IN_{tp5}	VSB	SLP_S3# input.
40	SLP_S5#	I	IN_{tp5}	VSB	SLP_S5# input.
37	ATXPGD	I	IN_{tp5}	VSB	ATX power good signal.
30	PSON#	O	OD_{12}	VSB	Power supply on-off output.
39	PWROK	O	O_{12} OD_{12}	VRTC	3VCC PWROK signal.
38	PWROK AMD_PWROK	O	O_{12} OD_{12}	VRTC	3VCC PWROK signal.
33	3VSBSW	O	OD_{24}	VRTC	Switch 3VSB power to memory when in S3 state.
36	RSTOUT0#	O	OD_{24}	VSB	PCI Reset Buffer 0. (from pin10)
35	RSTOUT1#	O	O_{24} OD_{24}	VSB	PCI Reset Buffer 1. (from pin10) This pin default is push-pull output and could be programmed to open-drain output by register Logic Device A CRF7 bit6.

5.8 Advanced Sleep State Control

PIN	SYMBOL	I/O	BUFFER TYPE	POWER WELL	DESCRIPTION
33	DEEP_S5	O	OD_{24}	VRTC	This pin is to control system power for entering “more power saving mode” while at S5.

5.9 SMBus Interface

PIN	SYMBOL	I/O	BUFFER TYPE	POWER WELL	DESCRIPTION
23	SCL	I/O	IN_{tsp5} OD_{12}	VSB	SMBus slave clock.
22	SDA	I/O	IN_{tsp5} OD_{12}	VSB	SMBus slave bi-directional Data.
23	MSCL	I/O	IN_{tsp5} OD_{12}	VSB	SMBus master clock.
22	MSDA	I/O	IN_{tsp5} OD_{12}	VSB	SMBus master bi-directional Data.

5.10 Power Pins

PIN	SYMBOL	I/O	BUFFER TYPE	POWER WELL	DESCRIPTION
21	3VSB	I		3VSB	+3.3 V stand-by power supply for the digital circuits.
48	VBAT	I		VBAT	+3 V on-board battery for the digital circuits.
8	3VCC	I		VCC	+3.3 V power supply for driving 3 V on host interface.
52	AVCC3	I		AVCC3	Analog +3.3 V power input. Internally supply power to all analog circuits.
57	CPUD- / AGND	I		CPUD- / AGND	Analog ground. The ground reference for all analog input. Internally connected to all analog circuits. This pin should be connected to ground.
45	VSS	I		VSS	Ground.

5.11 AMD Power-On Sequence

PIN	SYMBOL	I/O	BUFFER TYPE	POWER WELL	DESCRIPTION
53	CPUVCORE	I	AIN	AVCC3	Power sequence group B signal
50	VLDT	I	AIN	AVCC3	Power sequence group C signal
51	VDIMM	I	AIN	AVCC3	Memory power enable
42	VCORE_EN	O	OD_{12}	VSB	CPU Vcore power enable
41	VLDT_EN	O	OD_{12}	VSB	Hyper transport I/O power enable

PIN	SYMBOL	I/O	BUFFER TYPE	POWER WELL	DESCRIPTION
38	AMD_PWR OK	O	OD_{12}	VSB	AMD power on sequence ok signal
30	AMD_PSO N#	O	OD_{12}	VSB	Power supply on/off output to enable ATX

5.12 AMD SB-TSI Interface

PIN	SYMBOL	I/O	BUFFER TYPE	POWER WELL	DESCRIPTION
58	TSIC	O	OD_{12}	VCC	AMD SB-TSI clock output.
60	TSID	I/O	IN_{tsp3} OD_{12}	VCC	AMD SB-TSI data input / output.

5.13 Dual Voltage Control

PIN	SYMBOL	I/O	BUFFER TYPE	POWER WELL	DESCRIPTION
34	BKFD_CUT	O	OD_{12}	VSB	Power distribution control (When switching between main and standby regulators) for system transition into and out of the S3 sleep state.
33	LATCH_BK FD_CUT	O	O_{12}	VRTC	Power distribution control (When switching between main and standby regulators) for system transition into and out of the S5 sleep state.

5.14 DSW

PIN	SYMBOL	I/O	BUFFER TYPE	POWER WELL	DESCRIPTION
44	SLP_SUS#	I	IN_{tp5}	VSB	This pin connects to SLP_SUS# in CPT PCH
43	SLP_SUS_FET	O	OD_{12}	VSB	This pin connects to VSB power switch

5.15 IR

PIN	SYMBOL	I/O	BUFFER TYPE	POWER WELL	DESCRIPTION
46	IRRX1	I	IN_{tsp5}	VSB	IR Receiver input.
47	IRTX1	O	O_{12}	VSB	IR Transmitter output.

5.16 General Purpose I/O Port

5.16.1 GPIO-2 Interface

PIN	SYMBOL	I/O	BUFFER TYPE	POWER WELL	DESCRIPTION

PIN	SYMBOL	I/O	BUFFER TYPE	POWER WELL	DESCRIPTION
27	GP20	I/O	IN_{tsp5} O_{12} OD_{12}	VSB	General-purpose I/O port 2 bit 0.
26	GP21	I/O	IN_{tsp5} O_{12} OD_{12}	VSB	General-purpose I/O port 2 bit 1.
25	GP22	I/O	IN_{tsp5} O_{12} OD_{12}	VSB	General-purpose I/O port 2 bit 2.
24	GP23	I/O	IN_{tsp5} O_{12} OD_{12}	VSB	General-purpose I/O port 2 bit 3.
46	GP24	I/O	IN_{tsp5} O_{12} OD_{12}	VSB	General-purpose I/O port 2 bit 4.
47	GP25	I/O	IN_{tp5} O_{12} OD_{12}	VSB	General-purpose I/O port 2 bit 5.
58	GP26	I/O	IN_{tp5} O_{12} OD_{12}	VSB	General-purpose I/O port 2 bit 6.

5.16.2 GPIO-4 Interface

PIN	SYMBOL	I/O	BUFFER TYPE	POWER WELL	DESCRIPTION
23	GP41	I/O	IN_{tsp5} O_{12} OD_{12}	VSB	General-purpose I/O port 4 bit 1.
22	GP42	I/O	IN_{tsp5} O_{12} OD_{12}	VSB	General-purpose I/O port 4 bit 2.

5.16.3 GPIO-5 Interface

PIN	SYMBOL	I/O	BUFFER TYPE	POWER WELL	DESCRIPTION
44	GP54	I/O	IN_{tp5} O_{24} OD_{24}	VSB	General-purpose I/O port 5 bit 4.

PIN	SYMBOL	I/O	BUFFER TYPE	POWER WELL	DESCRIPTION
43	GP55	I/O	IN_{tp5} O_{12} OD_{12}	VSB	General-purpose I/O port 5 bit 5.
42	GP56	I/O	IN_{tp5} O_{8} OD_{8}	VSB	General-purpose I/O port 5 bit 6.
41	GP57	I/O	IN_{tp5} O_{8} OD_{8}	VSB	General-purpose I/O port 5 bit 7.

5.16.4 GPIO-7 Interface

PIN	SYMBOL	I/O	BUFFER TYPE	POWER WELL	DESCRIPTION
36	GP74	I/O	IN_{tp5} O_{12} OD_{12}	VSB	General-purpose I/O port 7 bit 4.
35	GP75	I/O	IN_{tp5} O_{12} OD_{12}	VSB	General-purpose I/O port 7 bit 5.

5.16.5 GPIO-8 Interface

PIN	SYMBOL	I/O	BUFFER TYPE	POWER WELL	DESCRIPTION
13	GP80	I/O	IN_{tp5} O_{12} OD_{12}	VSB	General-purpose I/O port 8 bit 0.
14	GP81	I/O	IN_{tp5} O_{12} OD_{12}	VSB	General-purpose I/O port 8 bit 1.
15	GP82	I/O	IN_{tp5} O_{12} OD_{12}	VSB	General-purpose I/O port 8 bit 2.
16	GP83	I/O	IN_{tp5} O_{12} OD_{12}	VSB	General-purpose I/O port 8 bit 3.
17	GP84	I/O	IN_{tp5} O_{12} OD_{12}	VSB	General-purpose I/O port 8 bit 4.

PIN	SYMBOL	I/O	BUFFER TYPE	POWER WELL	DESCRIPTION
18	GP85	I/O	IN_{tp5} O_{12} OD_{12}	VSB	General-purpose I/O port 8 bit 5.
19	GP86	I/O	IN_{tp5} O_{12} OD_{12}	VSB	General-purpose I/O port 8 bit 6.
20	GP87	I/O	IN_{tp5} O_{12} OD_{12}	VSB	General-purpose I/O port 8 bit 7.

5.17 Strapping Pins

PIN	SYMBOL	I/O	BUFFER TYPE	POWER WELL	DESCRIPTION
15	2E_4E_SEL	I	IN_{tdp5}	VSB	SIO I/O address selection (Strapped by LRESET#) Strapped to high: SIO I/O address is 4Eh/4Fh. Strapped to low: SIO I/O address is 2Eh/2Fh.
16	24M_48M_SEL	I	IN_{tdp5}	VSB	Input clock rate selection (Strapped by **VCC**: internal Power OK signal without any delay.) Strapped to high: The clock input on pin 1 is 48MHz. Strapped to low: The clock input on pin 1 is 24MHz.
18	TEST_MODE1	I	IN_{tdp5}	VSB	TEST_MODE1 function selection (Strapped by LRESET#) Please strap to low
47	AMDPWR_EN	I	IN_{tdp5}	VSB	Enable AMD power sequence function (Strapped by **VSB** power: internal RSMRST# signal) Strapped to high: Enable AMD power sequence Strapped to low: Disable AMD power sequence

Note . All Strapping results can be programming by LPC Interface. There are three conditions below:

1) VSB Strapping result can be programming by LPC, and reset by RSMRST#.
2) VCC Strapping result can be programming by LPC, and reset by PWROK.
3) LRESET# strapping (2E_4E_SEL) can be programming by LPC, and reset by LRESET#.

5.18 Internal pull-up, pull-down pins

Signal	Pin(s)	Power well	Type	Resistor	Note

Signal	Pin(s)	Power well	Type	Resistor	Note
Strapping Pins					
2E_4E_SEL	15	3VSB	Pull-down	47.4K	1
24M_48M_SEL	16	3VSB	Pull-down	47.4K	1
TEST_MODE1	18	3VSB	Pull-down	47.4K	1
AMDPWR_EN	47	3VSB	Pull-down	47.4K	2
Advanced Configuration & Power Interface					
PSIN#	29	3VSB	Pull-up	47.03K	

Note1. Active only during VCC Power-up reset

Note2. Active only during VSB Power-up reset

6. GLUE LOGIC

6.1 ACPI Glue Logic

Table 6-1 Pin Description

SYMBOL	PIN	DESCRIPTION
SLP_S5#	40	SLP_S5# input.
PWROK	39	This pin generates the PWROK signals while 3VCC is present.
ATXPGD	37	ATX power good input signal. It is connected to the PWROK signal from the power supply for PWROK / PWRGD generation. The default is enabled.
RSMRST#	49	The RSMRST# signal is a reset output and is used as the VSB power on reset signal for the South Bridge. When the NCT5532D detects the 3VSB voltage rises to "V1", it then starts a delay – "t1" before the rising edge of RSMRST# asserting. If the 3VSB voltage falls below "V2", the RSMRST# de-asserts immediately.

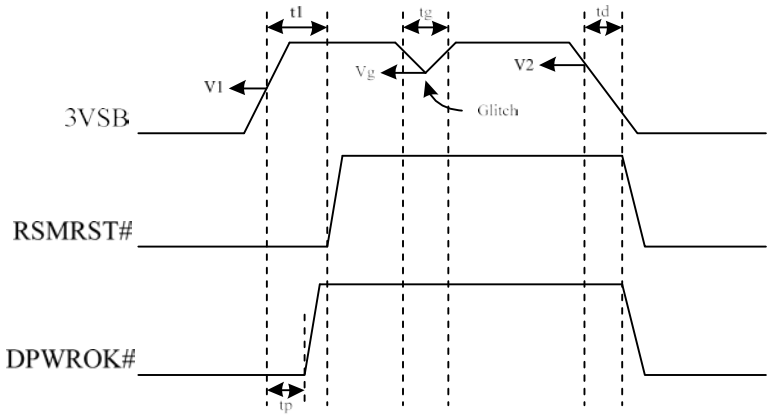

Figure 6-1 RSMRST#

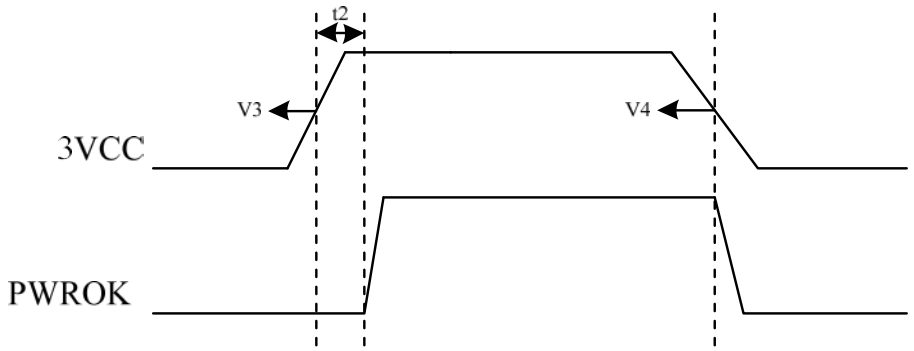

Figure 6-2 PWROK

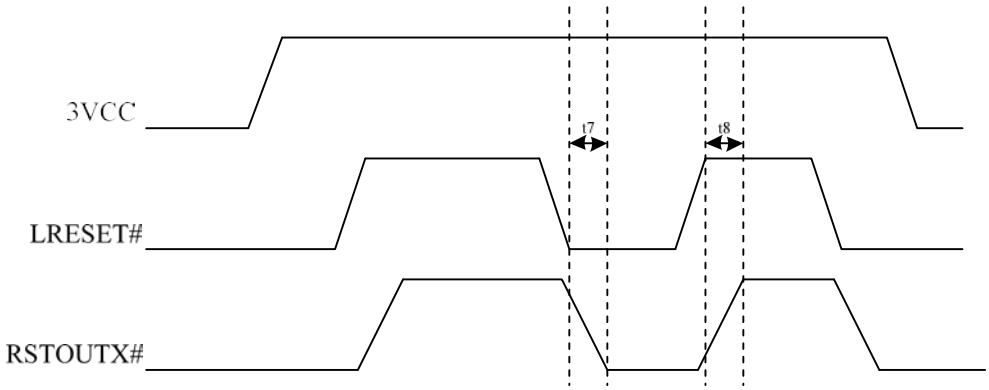

Figure 6-3 RSTOUTX# and LRESET#

TIMING	PARAMETER	MIN	MAX	UNIT
t1	Valid 3VSB to RSMRST# inactive	200	300	mS
tp	Valid 3VSB to DPWROK# inactive	100	150	mS
tg	3VSB Glitch allowance		1	uS
td	Falling 3VSB supply Delay		1	uS
t2	Valid 3VCC to PWROK active	300	500	mS
t7	LRESET# active to RSTOUTx# active	0	80	nS
t8	LRESET# inactive to RSTOUTx# inactive	0	80	nS

DC	PARAMETER	MIN	MAX	UNIT
V1	3VSB Valid Voltage	-	3.033	Volt
V2	3VSB Ineffective Voltage	2.882	-	Volt
V3	3VCC Valid Voltage	-	2.83	Volt
V4	3VCC Ineffective Voltage	2.68	-	Volt
Vg	3VSB drops by Power noise	2	-	Volt

Note： 1. The values above are the worst-case results of R&D simulation.

6.2 BKFD_CUT & LATCH_BKFD_CUT

NCT5532D supports BKFD_CUT & LATCH_BKFD_CUT functions, please refer the timing diagram below:

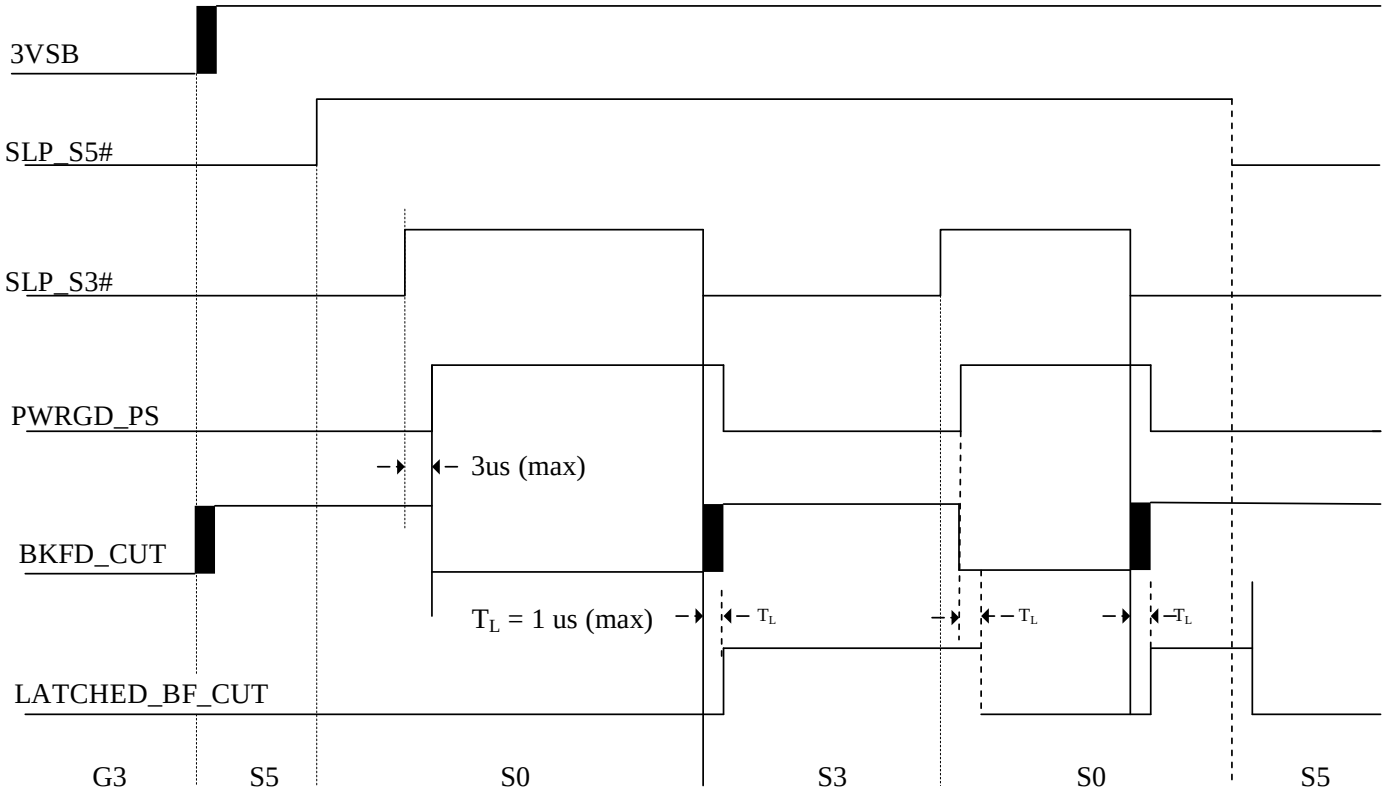

Figure 6-4 BKFD_CUT and LATCH_BKFD_CUT

BKFD_CUT (Backfeed_Cut) – When high, switches dual rails to standby power.

LATCH_BKFD_CUT (Latched_Backfeed_Cut) – When high, switches dual rails to standby power.

6.3 3VSBSW#

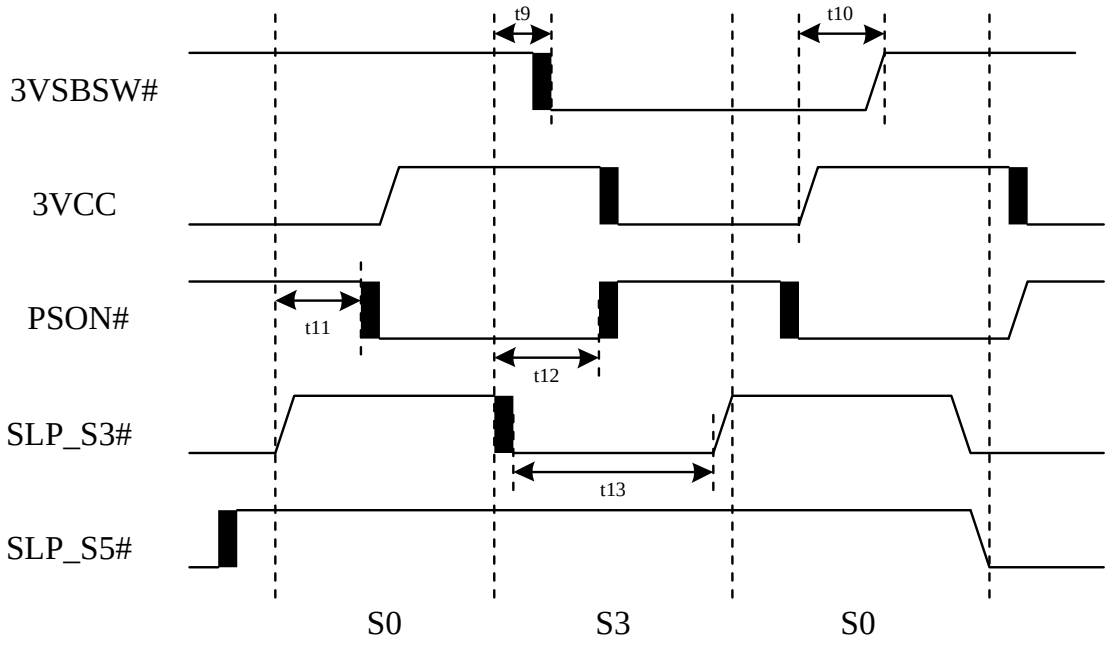

Figure 6-5 3VSBSW#

TIMING	PARAMETER	MIN	MAX	UNIT
t9	SLP_S3# active to 3VSBSW# active	0	30	mS
t10	3VCC active to 3VSBSW# inactive	90	142	mS
t11	SLP_S3# inactive to PSON# active	0	80	nS
t12	SLP_S3# active to PSON# inactive	15	45	mS
t13	SLP_S3# minimal Low Time	40	-	mS

6.4 PSON# Block Diagram

The PSON# function controls the main power on/off. The main power is turned on when PSON# is low. Please refer to the figure below.

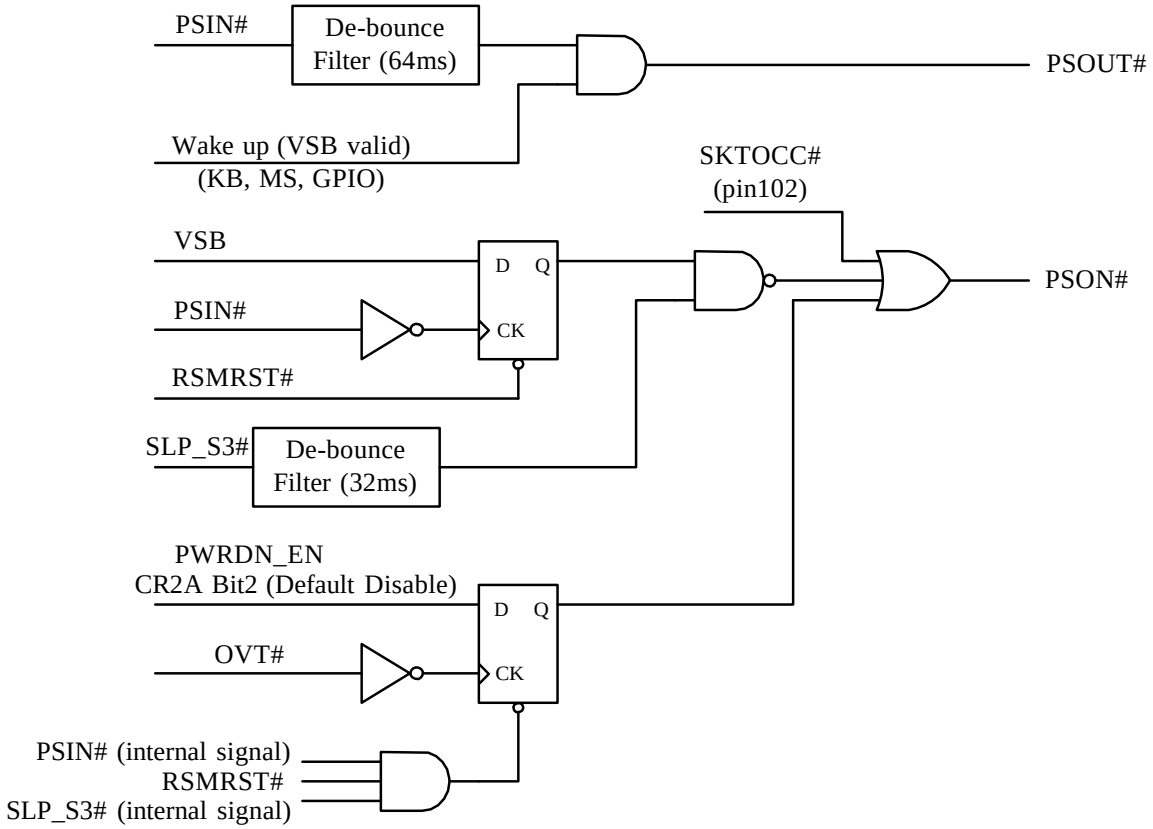

Figure 6-6 PSON# Block Diagram

6.5 PWROK

PWROK Signal indicates the main power (VCC Power) is valid. Besides, valid PWROK signal also requires the following conditions, as shown in the figure below.

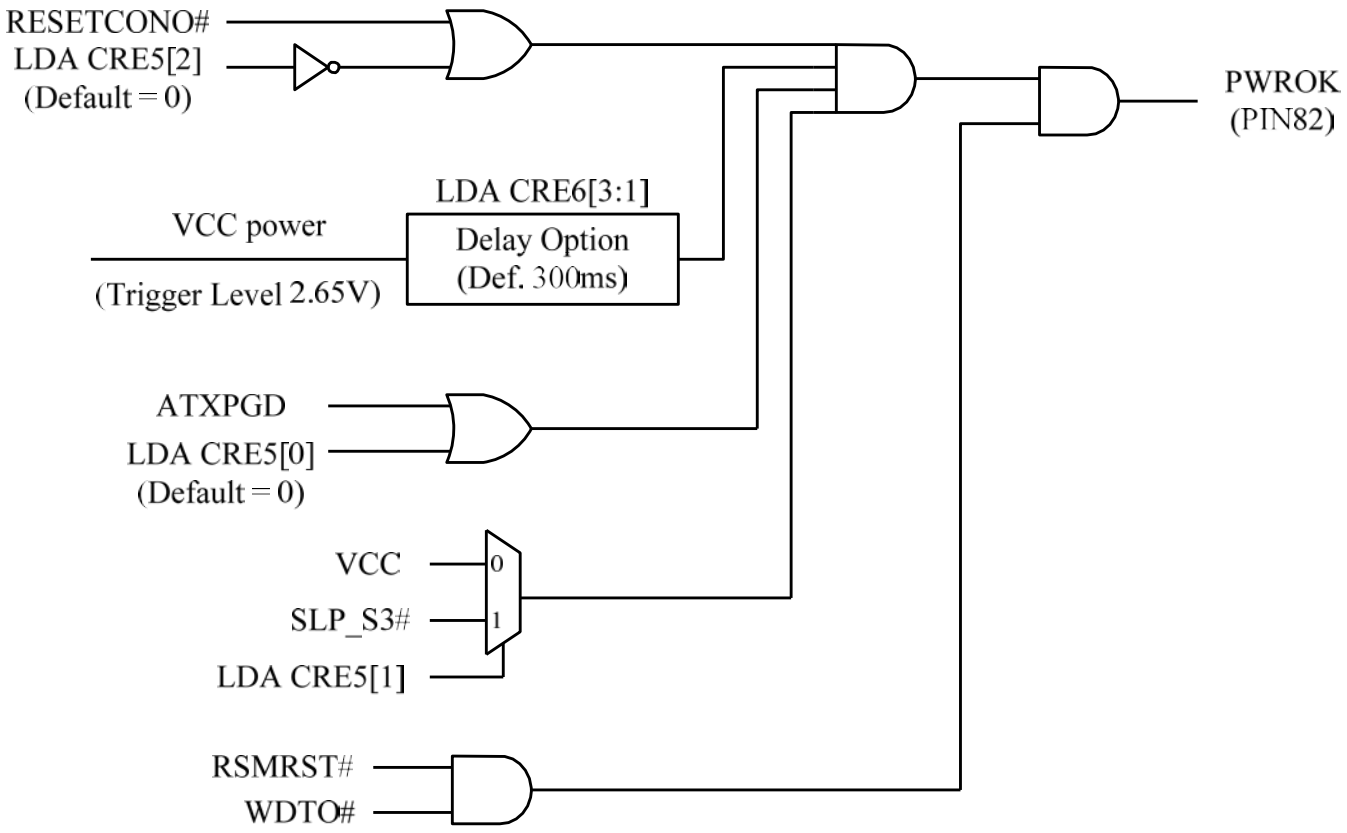

Figure 6-7 PWROK Block Diagram

6.6 Front Panel LEDs

NCT5532D supports two LED control pins – GRN_LED and YLW_LED.

For dual-color LED application:

(1)GRN_LED pin is connected to a 470ohm resistor to 5VSB, and the cathode of the green LED and the anode of the yellow LED.

(2)YLW_LED pin is connected to a 470ohm resistor to 5VSB, and the cathode of the yellow LED and the anode of the green LED.

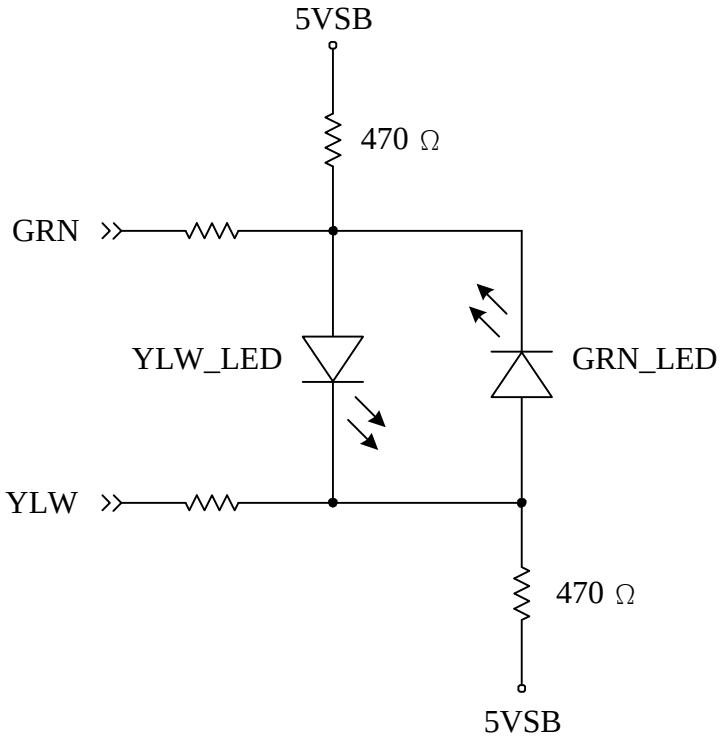

Figure 6-8 Illustration of Dual Color LED application

GRN_LED and YLW_LED pins are designed to show currently power states. There are Manual Mode and Automatic Mode:

6.6.1 Automatic Mode

Power state is S0 or S1: GRN_LED will be asserted by default.

Power state is S3: YLW_LED will be asserted by default.

Power state is S4 or S5: Both GRN_LED and YLW_LED will be de-asserted by default.

AUTO_EN	GRN_LED_RST (YLW_LED_RST)	Pwr State	SLP_S3#	SLP_S5#	GRN_LED	YLW_LED
1	X	S0,S1	1	1	GRN_BLK_FREQ	HIGH-Z
1	X	S3	0	1	HIGH-Z	YLW_BLK_FREQ
1	X	S4,S5	X	0	HIGH-Z	HIGH-Z

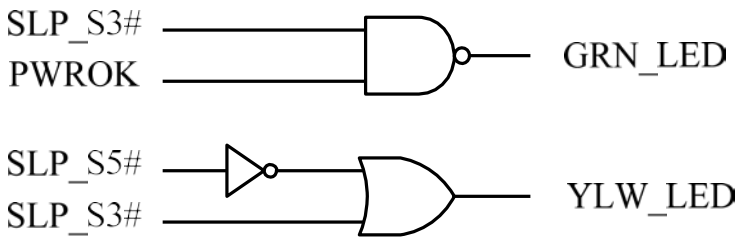

6.6.2 Manual Mode

AUTO_EN	GRN_LED_RST# (YLW_LED_RST)	Pwr State	SLP_S3#	SLP_S5#	GRN_LED	YLW_LED
0	0	S0,S1	1	1	GRN_BLK_FREQ	YLW_BLK_FREQ
0	0	S3	0	1	HIGH-Z	HIGH-Z
0	0	S4,S5	X	0	HIGH-Z	HIGH-Z
0	1	S0,S1	1	1	GRN_BLK_FREQ	YLW_BLK_FREQ
0	1	S3	0	1	GRN_BLK_FREQ	YLW_BLK_FREQ
0	1	S4,S5	X	0	GRN_BLK_FREQ	YLW_BLK_FREQ

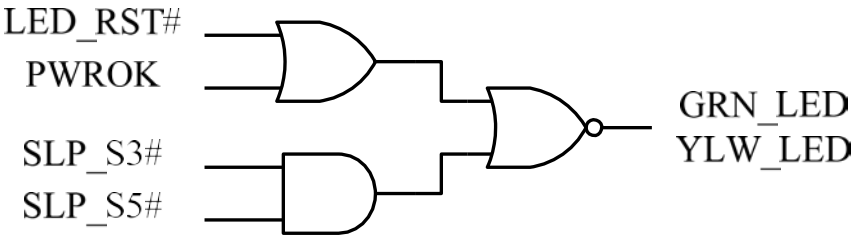

Register Neme	Register Location
AUTO_EN	Logic Device B, CRF7h, bit7
GRN_BLK_FREQ	Logic Device B, CRF7h, bit3~0
YLW_BLK_FREQ	Logic Device B, CRF8h, bit3~0
GRN_LED_RST#	Logic Device B, CRF7h, bit6
YLW_LED_RST#	Logic Device B, CRF8h, bit6

6.6.3 S0~S5 LED Blink Block Diagram

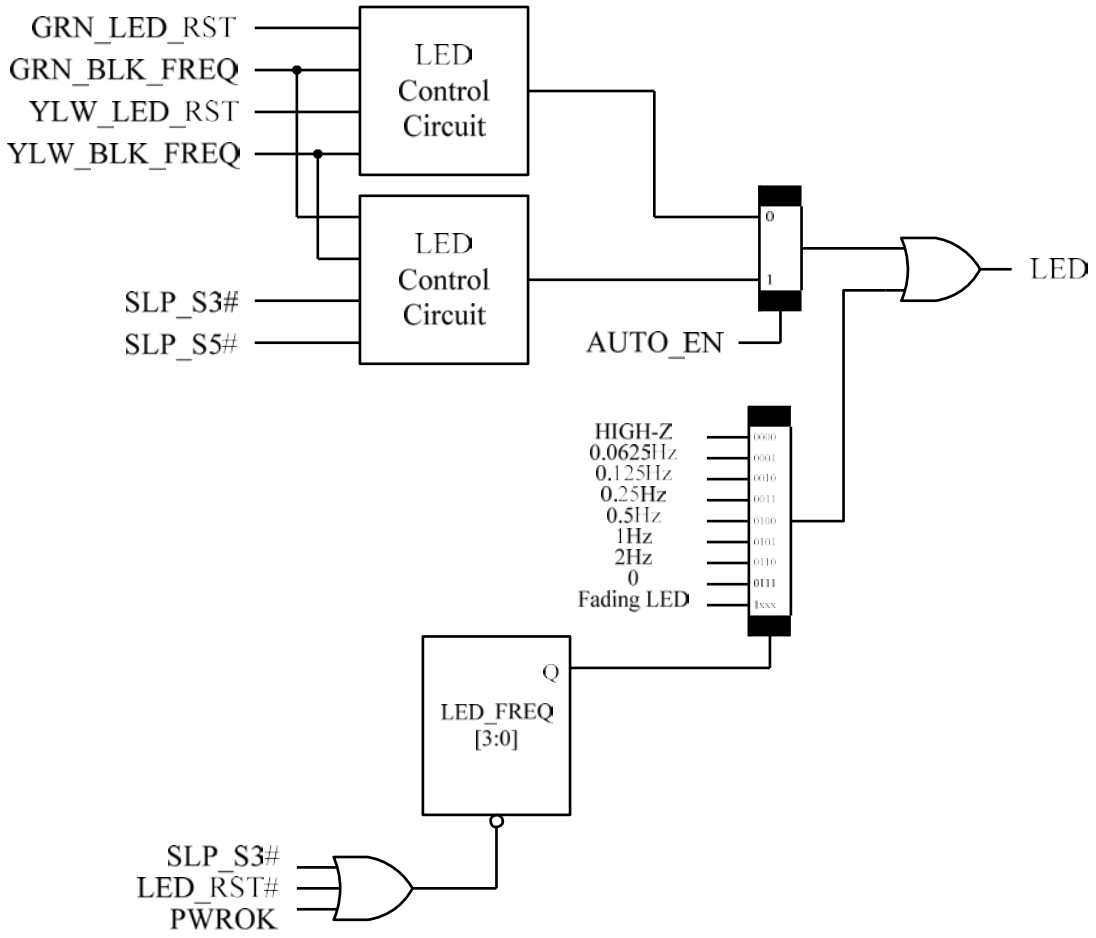

6.6.4 LED Pole (LED_POL)

Set to 0b, GRN_LED output is active low, as the following Figure(a)

Set to 1b, GRN_LED output is active high, as the following Figure(b)

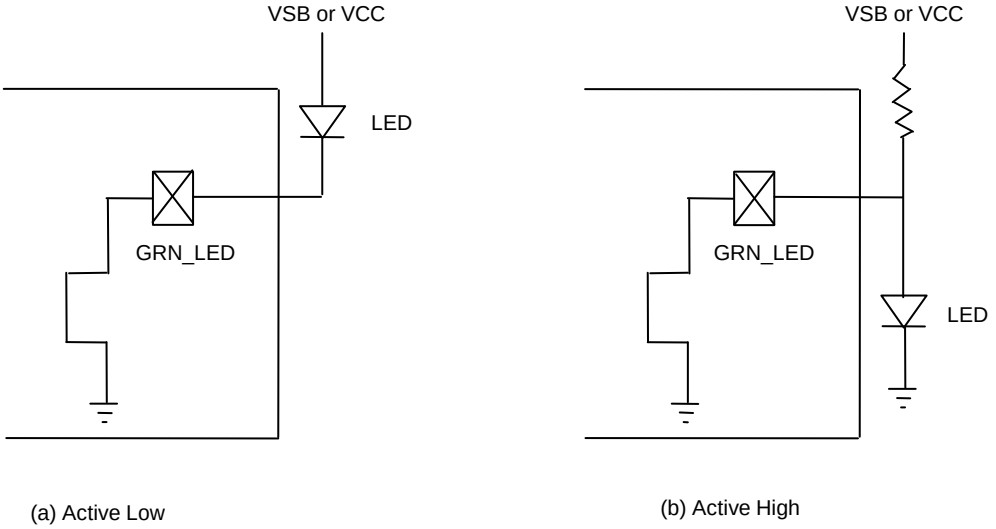

Figure 6-9 Illustration of LED polarity

6.6.5 Deeper Sleeping State Detect Function

These two LED pins could also be used to indicate if the system is in Deeper Sleeping State. For more detail, please refer to the section of Advanced Sleep State Control Function.

Enable_DEEP_S5	GRN_DEEPS#_Disable (YLW_DEEPS#_Disable)	Pwr State	GRN_LED	YLW_LED
1	0	DEEP_S5	DeepS5_GRN_BLK_FREQ	DeepS5_YLW_BLK_FREQ
1	1	DEEP_S5	HIGH-Z	HIGH-Z
0	X	S0~S5	S0~S5 behavior	S0~S5 behavior

Enable_DEEP_S3	GRN_DEEPS#_Disable (YLW_DEEPS#_Disable)	Pwr State	GRN_LED	YLW_LED
1	0	DEEP_S3	DeepS3_GRN_BLK_FREQ	DeepS3_YLW_BLK_FREQ
1	1	DEEP_S3	HIGH-Z	HIGH-Z
0	X	S0~S5	S0~S5 behavior	S0~S5 behavior

PRELIMINARY

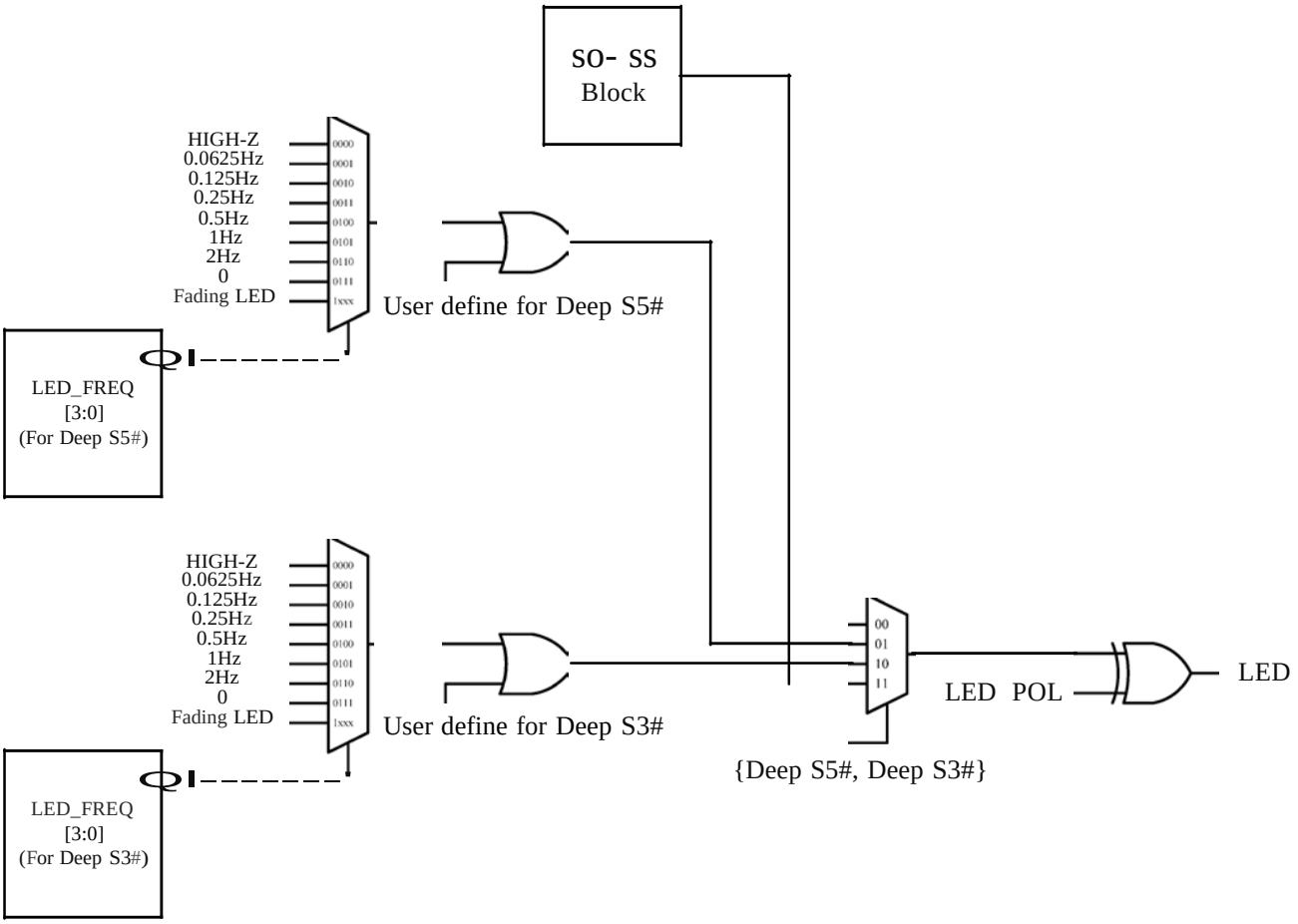

6.7 Advanced Sleep State Control (ASSC) Function

Advanced Sleep State Control (ASSC) Function is used to control the system power at S3 or S5 state. The purpose of this function is to provide a method to reduce power consumption at S3 or S5 state. This function is disabled by default. When VCC power is first supplied, BIOS can program the register to enable ASSC Function. The register is powered by 3VSB_IO and some is powered by VBAT. The related registers are located at Logic Device 16 CRE0h ~ CRE3h.

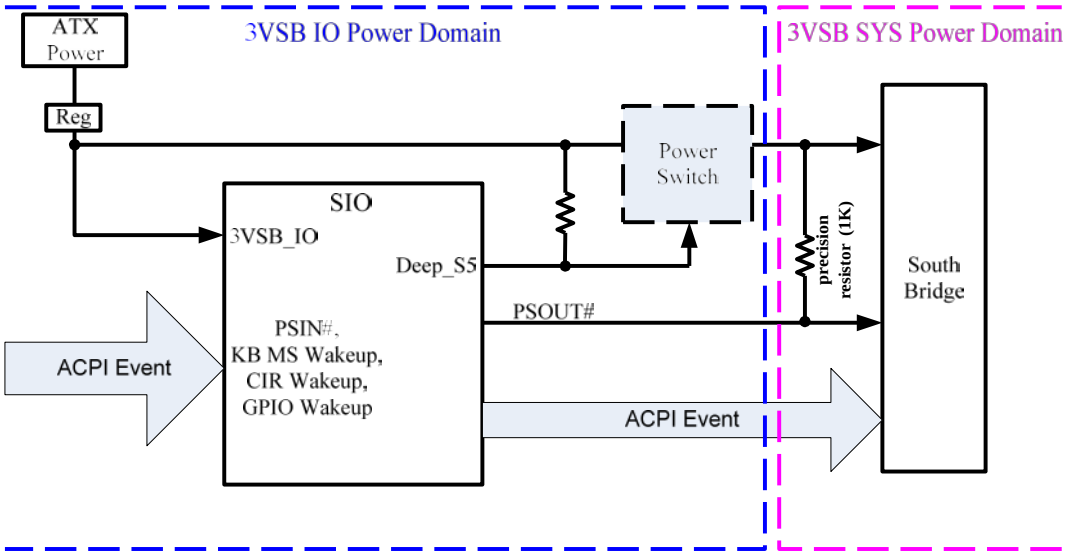

Figure 6-10 ASSC Application Diagram

6.7.1 When ASSC is disabled

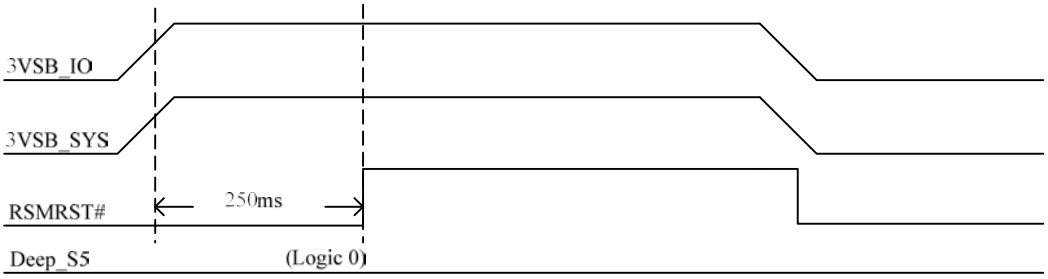

When ASSC is disabled, ACPI function is as same as the normal ACPI behavior.

6.7.2 When ASSC is enabled (Enter into Deeper Sleeping State)

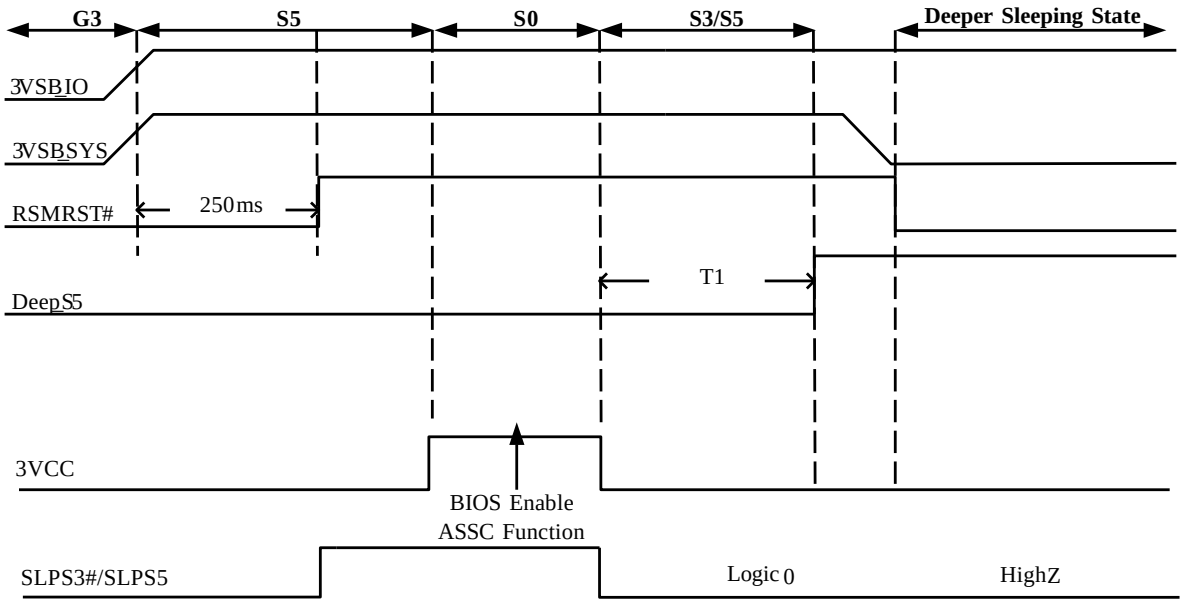

When the first time AC plug in and enter into S0 State, BIOS can enable ASSC Function (DeepS3 or DeepS5), when the system enters S3/S5 state, the pin DEEP_S5 will be asserted after pre configuration delay time (power_off_dly_time, LD16 CRE2) to make the system entering the "Deeper Sleeping State (DSS)" where system's VSB power is cut off. When pin DEEP_S5 asserts, the pin RSMRST# will de-assert by detecting PSOUT# signal (monitor 3VSB SYS Power).

6.7.3 When ASSC is enabled (Exit Deeper Sleeping State)

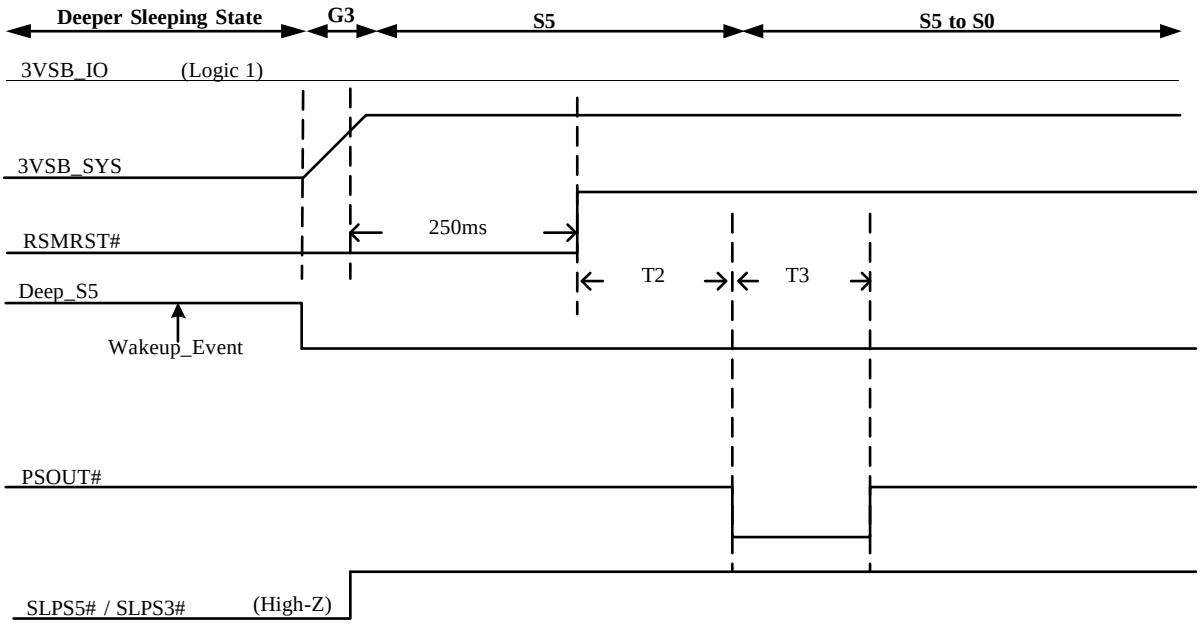

When any Wakeup Event (PSIN#, KB MS Wakeup, CIR wakeup, GPIO Wakeup) happened, pin DEEP_S5 will be de-asserted to turn on the VSB power to the system. The pin RSMRST# will de-assert when 3VSB_SYS power reach valid voltage. And then the pin PSOUT# will issue a low pulse (T3) turn on the system after T2 time

(wakeup delay time, LD16 CRE0). The PSOUT# low pulse is also programmable (LD16 CRE1). The T4 time is the delay from Deep_S5 ds-assert to Deeo_S5#_DELAY de-assert.

6.7.4 SLP_S5#_LATCH Control Function

SLP_S5#_LATCH control signal is similar to SLPS5# signal. When System is at S0 ~ S5 state, SLP_S5#_LATCH follows the SLPS5# signal. When system is at DeepS5 State, SLP_S5#_LATCH will keep low state till system returns to S0 state. When system is at DeepS3 State, SLP_S5#_LATCH will keep high till system returns to S0 state. Please see the following timing diagram:

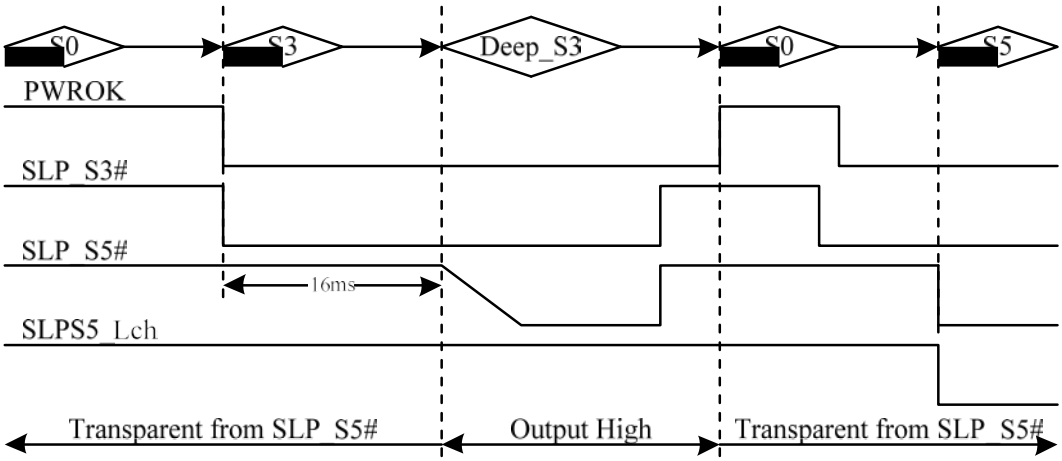

6.8 Intel DSW Function

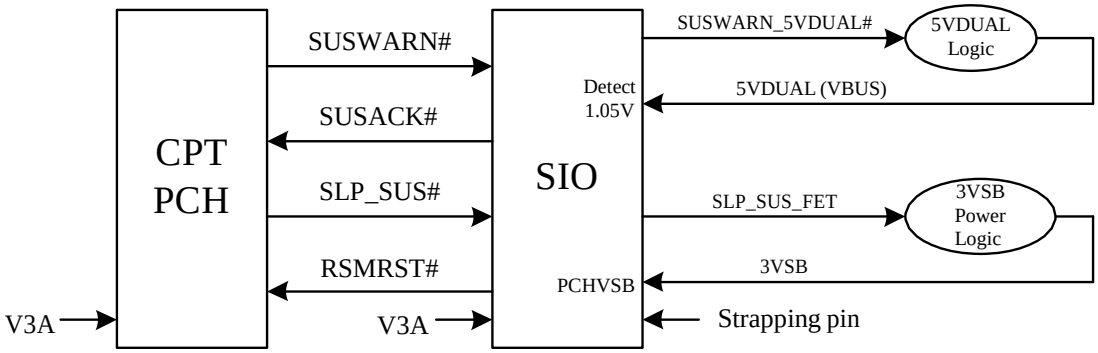

6.8.1 Enter DSW State timing diagram

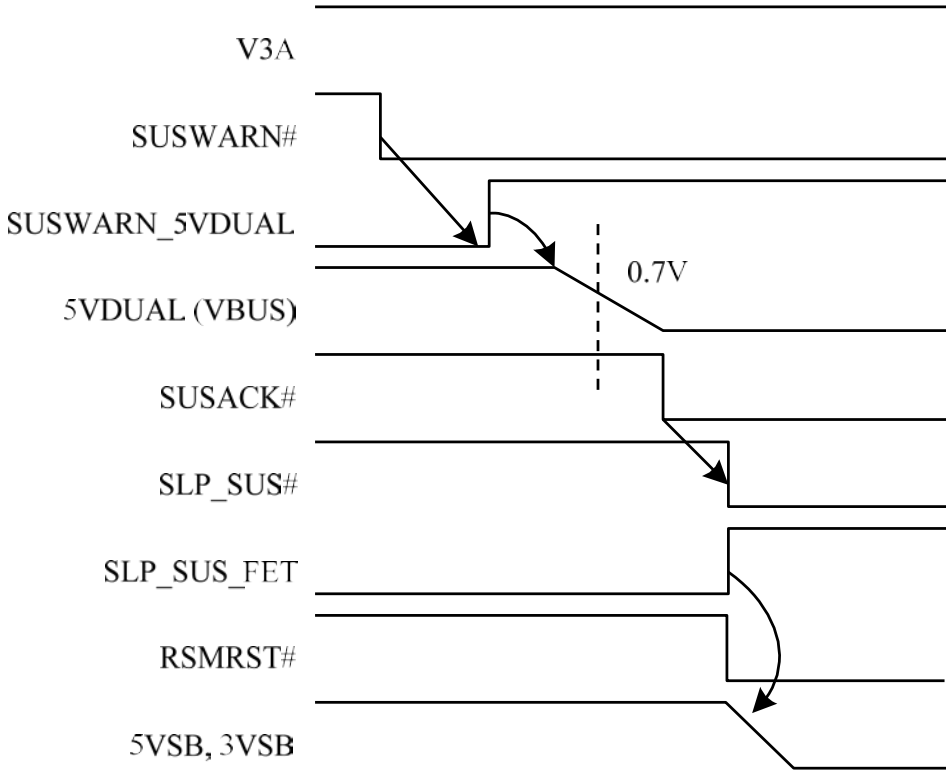

6.8.2 Exit DSW State timing diagram

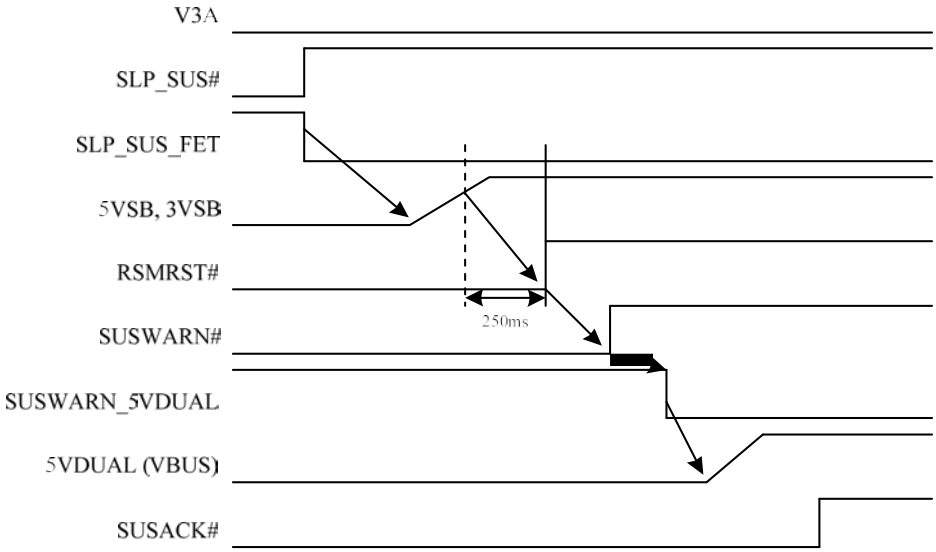

6.8.3 Application Circuit

The NCT5532D not only provides SIO Deep S5/S3 function, but also Intel DSW function. The application circuit should follow the guide below:

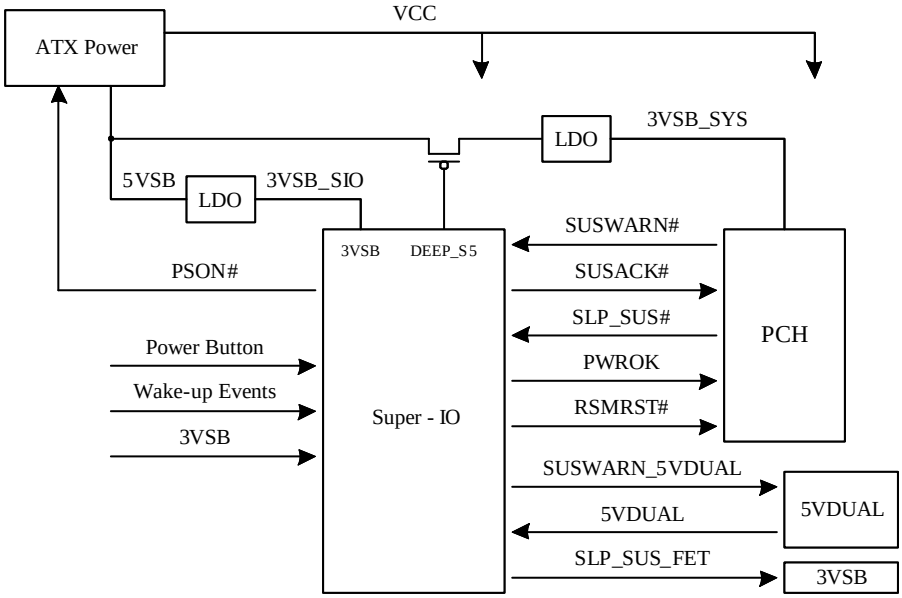

6.9 AMD Power-On Sequence

The NCT5532D supports new AMD power on sequence bace on ACPI power on sequence，therefore，user can choose which architecture by set the strapping pin98。If pin98 is 0, only ACPI power on sequence is set，otherwise, AMD power on sequence is combined with ACPI, user can set CR2F[5] to get the same condition. To make sure CR2B[4]:GP34_SEL and CR2B[0]:GP30_SEL are “0” before running the sequence, because they are ATXPGD and SLP_S5# pin select.

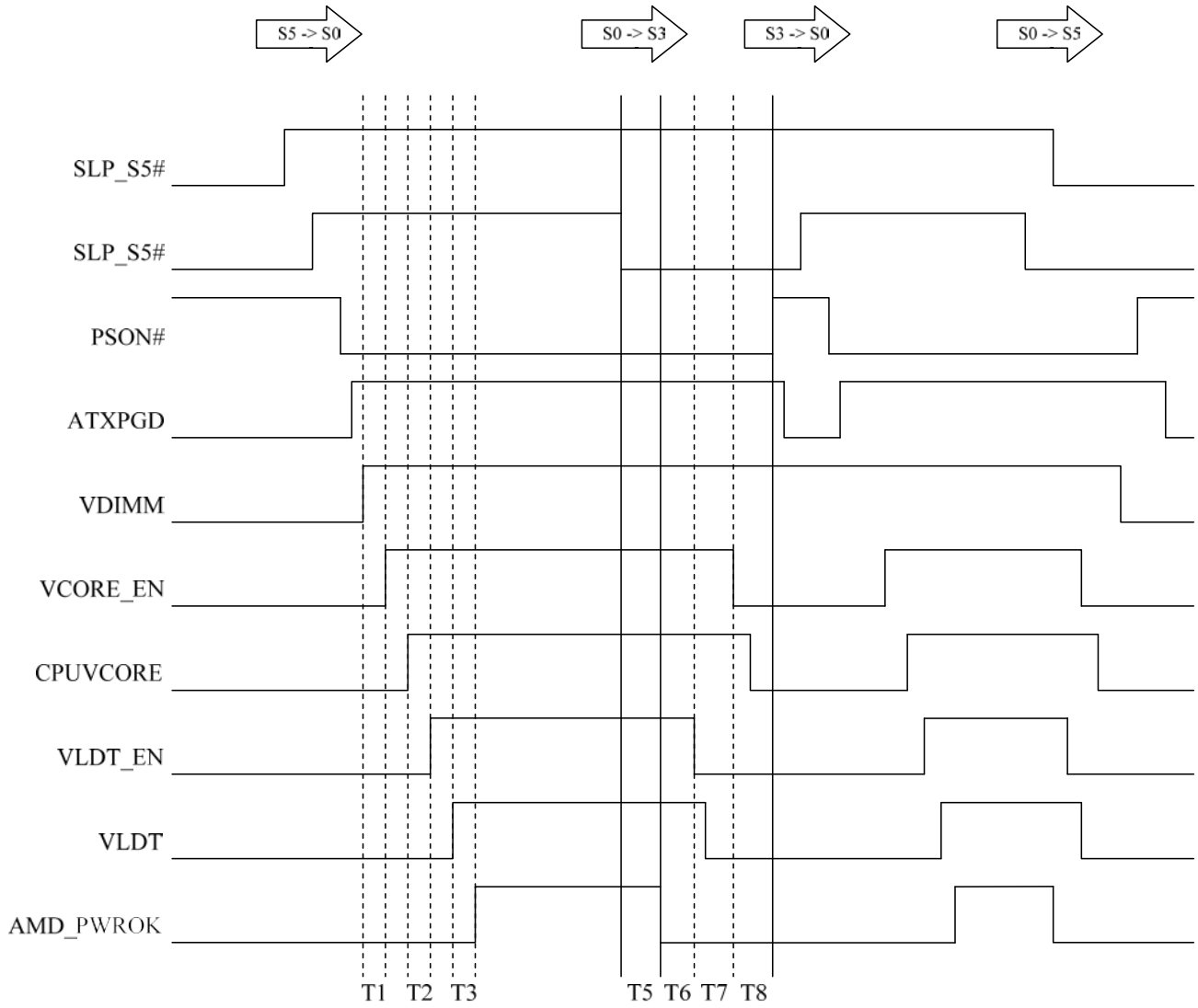

When S0->S3 or S0->S5, we support two kinds of power off sequence. One is non_level detect: it means VCORE_EN will pull low as long as about 10~15ms after VLDT_EN pull low and PSON will pull high as long as about 10~15ms after VCORE_EN pull low. Two, level detect, means VCORE_EN will pull low depend on delay time and pre-power group VLDT_IN, and PSON will pull high depend on pre-power group (VDIMM_IN, ATXPGD), too. User can set CR27[1] to choose two condition and its default is “0” (level detect).

Timing Parameters

Parameter	Description	Min.	Typ.	Max.	Unit
T1	Period of VDIMM rises to 0.7V to VCORE_EN assertion	10		15	ms
T2	Period of CPUVCORE rises to 0.7V to VLDT_EN assertion	10		15	ms
T3	Period of VLDT_IN rises to 0.7V to AMD_PWROK assertion	10		15	ms
T4	Period of SLP_S3# deassertion to AMD_PWROK deassertion	10		50	ms
T5	Period of CPUPWRGD deassertion to VLDT_EN deassertion	10		15	ms
T6	Period of VLDT_EN deassertion to VCORE_EN deassertion	10		15	ms
T7	Period of VCORE_EN deassertion to PSON# deassertion	10		15	ms

VDDA: 2.5V (not controlled by SIO)

VDIMM: DDR 1.8V, DDR3 1.5V (not controlled by SIO)

VLDT: 1.2V

VCORE: 0.8V ~ 1.55V

To support AMD power on sequence，we add some Pinout as VLDT_EN ，VCORE_EN，VLDT，VDIMM。The sequence is follow the figure above。CPU and NB must conform to the SPEC or else the SIO will suspend at the sequence。

7. CONFIGURATION REGISTER ACCESS PROTOCOL

The NCT5532D uses a special protocol to access configuration registers to set up different types of configurations. The NCT5532D has a total of 16 Logical Devices (from Logical Device 1 to Logical Device 16 with the exception of Logical Device 0, 1, 4, C, 10, 11, 12, 13, 14 & 15 for backward compatibility) corresponding to fourteen individual functions: UART A (Logical Device 2), IR (Logical Device 3), Keyboard Controller (Logical Device 5), CIR (Logical Device 6), GPIO7 & 8 (Logical Device 7), WDT1 (Logical Device 8), GPIO2, 4, 5, 7 & 8 (Logical Device 9), ACPI (Logical Device A), Hardware Monitor & Front Panel LED (Logical Device B), WDT1 (Logical Device D), CIRWAKEUP (Logical Device E), GPIO (Logical Device F), and Deep Sleep (Logical Device 16).

It would require a large address space to access all of the logical device configuration registers if they were mapped into the normal PC address space. The NCT5532D, then, maps all the configuration registers through two I/O addresses (2Eh/2Fh or 4Eh/4Fh) set at power on by the strap pin 2E_4E_SEL. The two I/O addresses act as an index/data pair to read or write data to the Super I/O. One must write an index to the first I/O address which points to the register and read or write to the second address which acts as a data register.

An extra level of security is added by only allowing data updates when the Super I/O is in a special mode, called the Extended Function Mode. This mode is entered by two successive writes of 87h data to the first I/O address. This special mode ensures no false data can corrupt the Super I/O configuration during a program runaway.

There are a set of global registers located at index 0h – 2Fh, containing information and configuration for the entire chip.

The method to access the control registers of the individual logical devices is straightforward. Simply write the desired logical device number into the global register 07h. Subsequent accesses with indexes of 30h or higher are directly to the logical device registers.

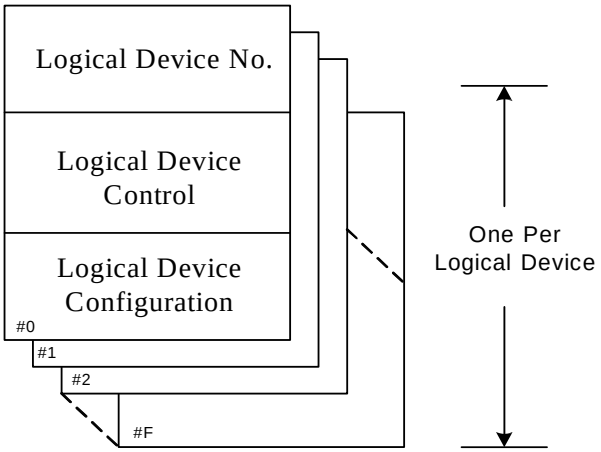

Figure 7-1 Structure of the Configuration Register

Table 7-1 Devices of I/O Base Address

LOGICAL DEVICE NUMBER	FUNCTION	I/O BASE ADDRESS
0	Reserved	
1	Reserved	
2	UART A	100h ~ FF8h
3	IR	100h ~ FF8h
4	Reserved	
5	Keyboard Controller	100h ~ FFFh
6	CIR	100h ~ FF8h
7	GPIO 7 & 8	Reserved
8	WDT1	Reserved
9	GPIO 2, 4, 5, 7 & 8	Reserved
A	ACPI	Reserved
B	Hardware Monitor & Front Panel LED	100h ~ FFEh
C	Reserved	
D	WDT1	Reserved
E	CIRWAKEUP	100h ~ FF8h
F	GPIO	Reserved
10	Reserved	
11	Reserved	
12	Reserved	
13	Reserved	
14	Reserved	
15	Reserved	
16	Deep Sleep	Reserved

7.1 Configuration Sequence

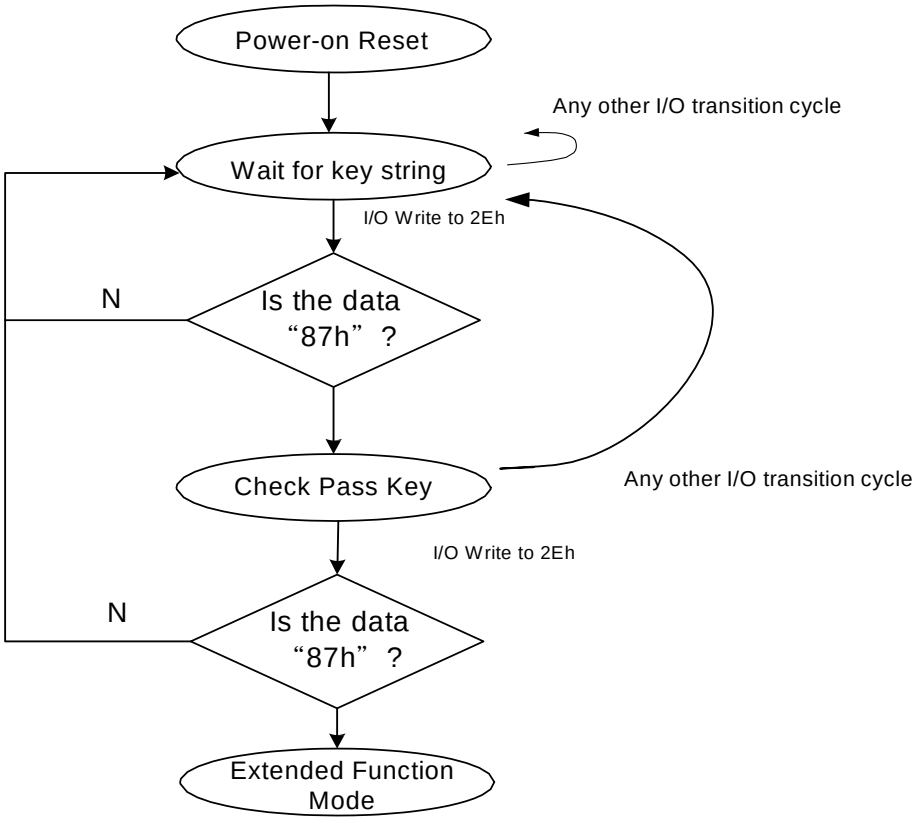

Figure 7-2 Configuration Register

To program the NCT5532D configuration registers, the following configuration procedures must be followed in sequence:

(1). Enter the Extended Function Mode.

(2). Configure the configuration registers.

(3). Exit the Extended Function Mode.

7.1.1 Enter the Extended Function Mode

To place the chip into the Extended Function Mode, two successive writes of 0x87 must be applied to Extended Function Enable Registers (EFERs, i.e. 2Eh or 4Eh).

7.1.2 Configure the Configuration Registers

The chip selects the Logical Device and activates the desired Logical Devices through Extended Function Index Register (EFIR) and Extended Function Data Register (EFDR). The EFIR is located at the same address as the EFER, and the EFDR is located at address (EFIR+1).

First, write the Logical Device Number (i.e. 0x07) to the EFIR and then write the number of the desired Logical Device to the EFDR. If accessing the Chip (Global) Control Registers, this step is not required.

Secondly, write the address of the desired configuration register within the Logical Device to the EFIR and then write (or read) the desired configuration register through the EFDR.

7.1.3 Exit the Extended Function Mode

To exit the Extended Function Mode, writing 0xAA to the EFER is required. Once the chip exits the Extended Function Mode, it is in the normal running mode and is ready to enter the configuration mode.

7.1.4 Software Programming Example

The following example is written in Intel 8086 assembly language. It assumes that the EFER is located at 2Eh, so the EFIR is located at 2Eh and the EFDR is located at 2Fh. If the HEFRAS (CR[26h] bit 6 showing the value of the strap pin at power on) is set, 2Eh can be directly replaced by 4Eh and 2Fh replaced by 4Fh.

This example programs the configuration register F0h (clock source) of logical device 1 (UART A) to the value of 3Ch (24MHz). First, one must enter the Extended Function Mode, then setting the Logical Device Number (Index 07h) to 01h. Then program index F0h to 3Ch. Finally, exit the Extended Function Mode.

```
;-----------------------------------------------------
; Enter the Extended Function Mode
;-----------------------------------------------------
MOV     DX, 2EH
MOV     AL, 87H
OUT     DX, AL
OUT     DX, AL
;-----------------------------------------------------------------------------
; Configure Logical Device 1, Configuration Register CRF0
;-----------------------------------------------------------------------------
MOV     DX, 2EH
MOV     AL, 07H
OUT     DX, AL          ; point to Logical Device Number Reg.
MOV     DX, 2FH
MOV     AL, 01H
OUT     DX, AL          ; select Logical Device 1
;
MOV     DX, 2EH
MOV     AL, F0H
OUT     DX, AL          ; select CRF0
MOV     DX, 2FH
MOV     AL, 3CH
OUT     DX, AL          ; update CRF0 with value 3CH
;-----------------------------------------------
; Exit the Extended Function Mode
;-----------------------------------------------
MOV     DX, 2EH
MOV     AL, AAH
OUT     DX, AL
```

8. HARDWARE MONITOR

8.1 General Description

The NCT5532D monitors several critical parameters in PC hardware, including power supply voltages, fan speeds, and temperatures, all of which are very important for a high-end computer system to work stably and properly. In addition, proprietary hardware reduces the amount of programming and processor intervention to control cooling fan speeds, minimizing ambient noise and maximizing system temperature and reliability.

The NCT5532D can simultaneously monitor all of the following inputs:

- 8 analog voltage inputs (5 internal voltages CPUVCORE, VBAT, 3VSB, 3VCC and AVCC; 3 external voltage inputs)
- 2 fan tachometer inputs
- 2 remote temperatures, using either a thermistor or from the CPU thermal diode (voltage or Current Mode measurement method)

These inputs are converted to digital values using the integrated, eight-bit analog-to-digital converter (ADC).

In response to these inputs, the NCT5532D can generate the following outputs:

- 2 PWM (pulse width modulation) and one DC fan outputs for the fan speed control
- SMI# via GPIO
- OVT# signals for system protection events via GPIO

The NCT5532D provides hardware access to all monitored parameters through the LPC or I^2C interface and software access through application software, such as Nuvoton's Hardware Doctor™, or BIOS.

The rest of this section introduces the various features of the NCT5532D hardware-monitor capability. These features are divided into the following sections:

- Access Interfaces
- Analog Inputs
- Fan Speed Measurement and Control
- Smart Fan Control
- SMI# interrupt mode
- OVT# interrupt mode
- Registers and Value RAM

8.2 Access Interfaces

The NCT5532D provides two interfaces, LPC and I^2C, for the microprocessor to read or write the internal registers of the hardware monitor.

8.3 LPC Interface

The internal registers of the hardware monitor block are accessible through two separate methods on the LPC bus. The first set of registers, which primarily enable the block and set its address in the CPU I/O address space are accessed by the Super I/O protocol described in Chapter 7 at address 2Eh/2Fh or 4Eh/4Fh. The bulk of the functionality and internal registers of this block are accessed form an index/data pair of CPU I/O addresses. The standard locations are usually 295h/296h and are set by CR[60h]&CR[61h] accessed using the Super I/O protocol as described in Chapter 7.

Due to the number of internal register, it is necessary to separate the register sets into “banks” specified by register 4Eh. The structure of the internal registers is shown in the following figure.

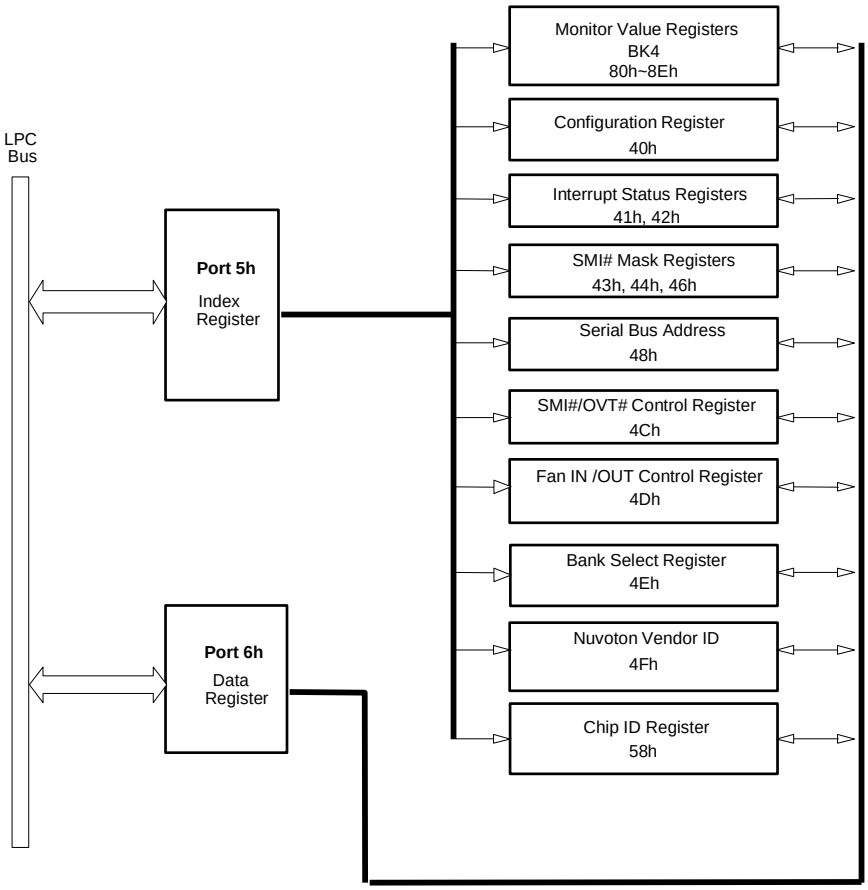

Figure 8-1 LPC Bus’ Reads from / Write to Internal Registers

8.4 I²C interface

The I²C interface is a second, serial port into the internal registers of the hardware monitor function block. The interface is totally compatible with the industry-standard I²C specification, allowing external components that are also compatible to read the internal registers of the NCT5532D hardware monitor and control fan speeds. The address of the I²C peripheral is set by the register located at index 48h (which is accessed by the index/data pair at I/O address typically at 295h/296h)

The two timing diagrams below illustrate how to use the I²C interface to write to an internal register and how to read the value in an internal register, respectively.

(a) Serial bus write to internal address register followed by the data byte

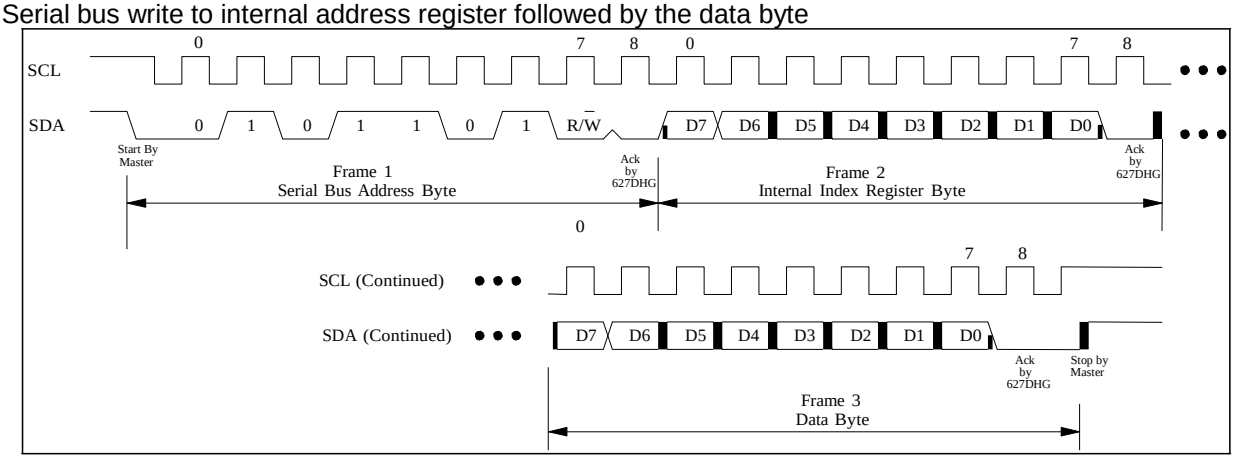

Figure 8-2 Serial Bus Write to Internal Address Register Followed by the Data Byte

(b) Serial bus read from a register

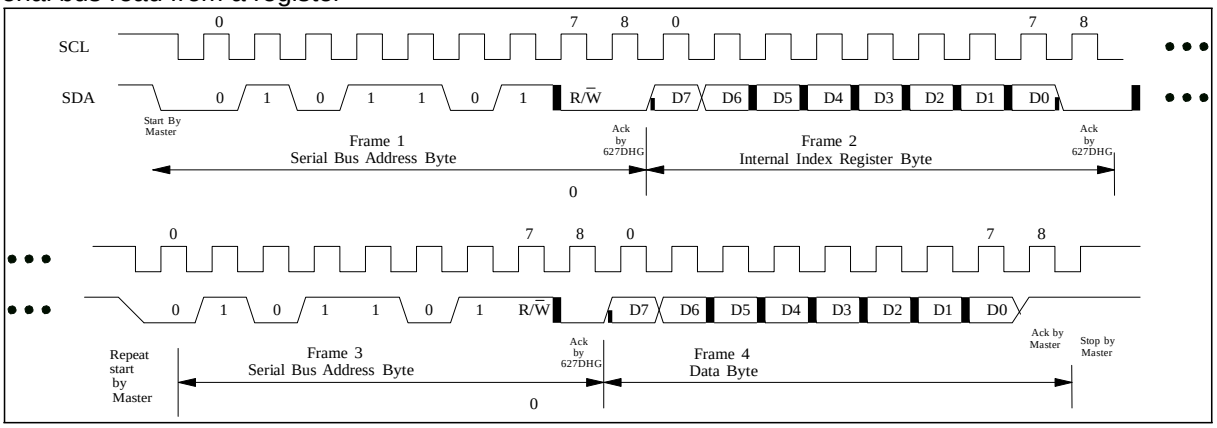

Figure 8-3 Serial Bus Read from Internal Address Register

8.5 Analog Inputs

The 8 analog inputs of the hardware monitor block connect to an 8-bit Analog to Digital Converter (ADC) and consist of 4 general-purpose inputs connected to external device pins and 4 internal signals connected to the power supplies (AVCC, VBAT, 3VSB and 3VCC). All inputs are limited to a maximum voltage of 2.048V due to an internal setting of 8mV LSB (256 steps x 8mV = 2.048V). All inputs to the ADC must limit the maximum voltage by using a voltage divider. The power supplies have internal resistors, while the external pins require outside limiting resistors as described below. The figure shown below is an illustration.

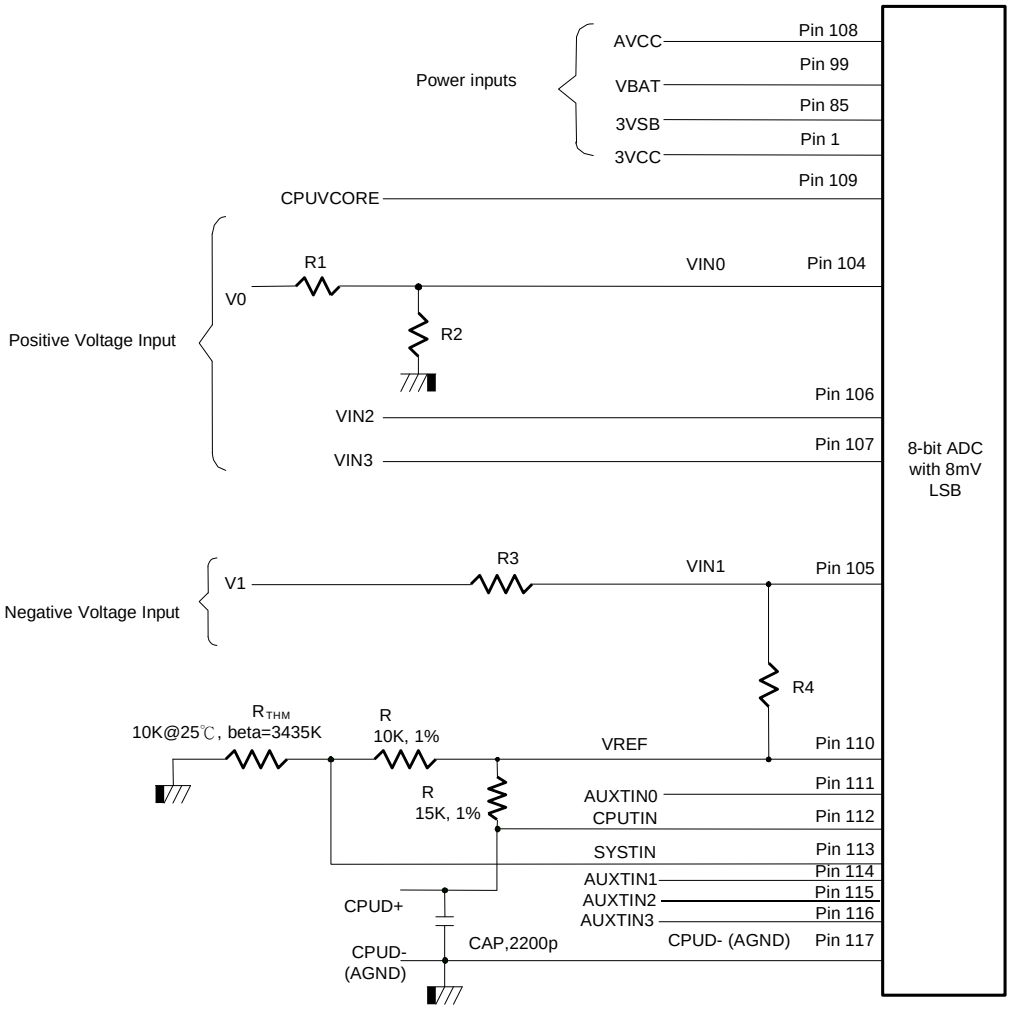

Figure 8-4 Analog Inputs and Application Circuit of the NCT5532D

As illustrated in the figure above, other connections may require some external circuits. The rest of this section provides more information about voltages outside the range of the 8-bit ADC, CPU Vcore voltage detection, and temperature sensing.

8.5.1 Voltages Over 2.048 V or Less Than 0 V

Input voltages greater than 2.048 V should be reduced by an external resistor divider to keep the input voltages in the proper range. For example, input voltage V_0 (+12 V) should be reduced before it is connected to VIN0 according to the following equation:

$$VIN0 = V_0 \times \frac{R_2}{R_1 + R_2}$$

R1 and R2 can be set to 56 KΩ and 10 KΩ, respectively, to reduce V_0 from +12 V to less than 2.048 V.

All the internal inputs of the ADC, AVCC, VBAT, 3VSB and 3VCC utilize an integrated voltage divider with both resistors equal to 34KΩ, yielding a voltage one half of the power supply. Since one would expect a worst-case 10% variation or a 3.63V maximum voltage, the input to the ADC will be 1.815V, well within the maximum range.

$$V_{in} = VCC \times \frac{34K\Omega}{34K\Omega + 34K\Omega} \cong 1.65V$$, where VCC is set to 3.3V

The CPUVCORE pin feeds directly into the ADC with no voltage divider since the nominal voltage on this pin is only 1.2V.

Negative voltages are handled similarly, though the equation looks a little more complicated. For example, negative voltage V1 (-12V) can be reduced according to the following equation:

$$VIN1 = (V_1 - 2.048) \times \frac{R_4}{R_3 + R_4} + 2.048, where V_1 = -12$$

R3 and R4 can be set to 232 KΩ and 10 KΩ, respectively, to reduce negative input voltage V_1 from –12 V to less than 2.048 V. Note that R4 is referenced to VREF, or 2.048V instead of 0V to allow for more dynamic range. This is simply good analog practice to yield the most precise measurements.

Both of these solutions are illustrated in the figure above.

8.5.2 Voltage Data Format

The data format for voltage detection is an eight-bit value, and each unit represents an interval of 8 mV.

Detected Voltage = Reading * 0.008 V

If the source voltage was reduced by a voltage divider, the detected voltage value must be scaled accordingly.

8.5.2.1. Voltage Reading

NCT5532D has 9 voltage reading:

	CPUVCORE	**AVCC**	**3VCC**	**VIN2**	**VIN3**
Voltage reading	Bank4, Index80	Bank4, Index82	Bank4, Index83	Bank4, Index8C	Bank4, Index8D
	3VSB	**VBAT**	**VTT**	**VIN4**	
Voltage reading	Bank4, Index87	Bank4, Index88	Bank4, Index89	Bank4, Index86	

8.5.3 Temperature Data Format

The data format for sensors CPUTIN and AUXTIN0 is 9-bit, two's-complement. This is illustrated in the table below. There are two sources of temperature data: external thermistors or thermal diodes.

Table 8-1 Temperature Data Format

TEMPERATURE	8-BIT DIGITAL OUTPUT		9-BIT DIGITAL OUTPUT	
	8-BIT BINARY	8-BIT HEX	9-BIT BINARY	9-BIT HEX
+125°C	0111,1101	7Dh	0,1111,1010	0FAh
+25°C	0001,1001	19h	0,0011,0010	032h
+1°C	0000,0001	01h	0,0000,0010	002h
+0.5°C	-	-	0,0000,0001	001h
+0°C	0000,0000	00h	0,0000,0000	000h
-0.5°C	-	-	1,1111,1111	1FFh
-1°C	1111,1111	FFh	1,1111,1110	1FFh
-25°C	1110,0111	E7h	1,1100,1110	1Ceh
-55°C	1100,1001	C9h	1,1001,0010	192h

8.5.3.1. Monitor Temperature from Thermistor

External thermistors should have a β value of 3435K and a resistance of 10 KΩ at 25°C. As illustrated in the schematic above, the thermistor is connected in series with a 10-KΩ resistor and then connects to VREF. The configuration registers to select a thermistor temperature sensor and the measurement method are found at Bank 0, index 59h, 5Dh, and 5Eh.

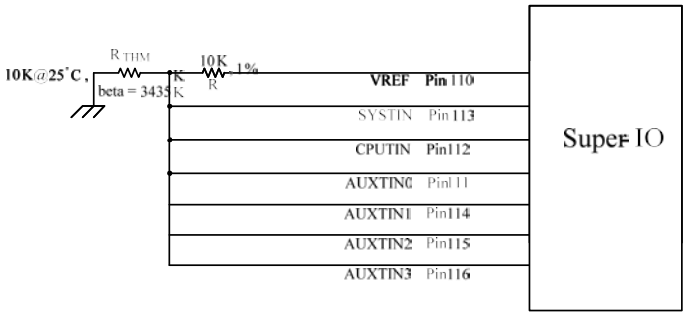

Figure 8-5 Monitoring Temperature from Thermistor

8.5.3.2. Monitor Temperature from Thermal Diode (Voltage Mode)

The thermal diode D- pin is connected to AGND, and the D+ pin is connected to the temperature sensor pin in the NCT5532D. A 15-KΩ resistor is connected to VREF to supply the bias current for the diode, and the 2200-pF, bypass capacitor is added to filter high-frequency noise. The configuration registers to select a thermal diode temperature sensor and the measurement method are found at Bank 0, index 5Dh, and 5Eh.

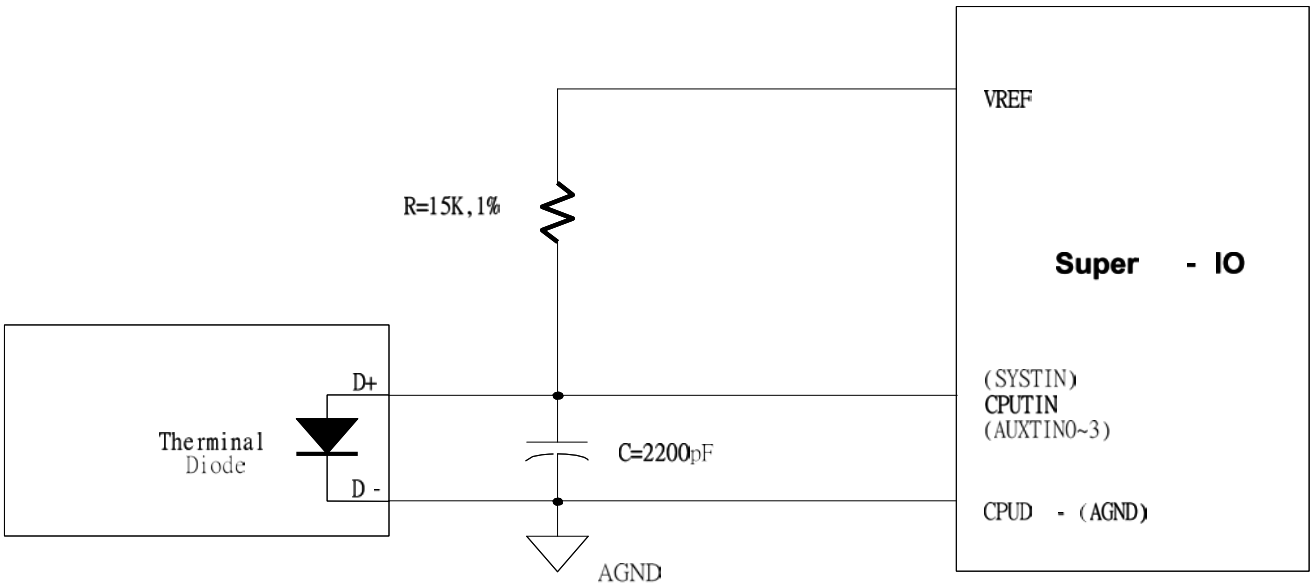

Figure 8-6 Monitoring Temperature from Thermal Diode (Voltage Mode)

8.5.3.3. Monitor Temperature from Thermal Diode (Current Mode)

The NCT5532D can also sense the diode temperature through Current Mode and the circuit is shown in the following figure.

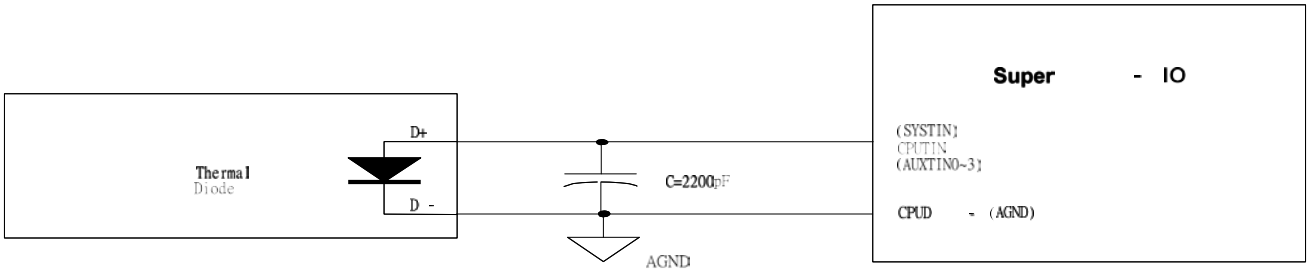

Figure 8-7 Monitoring Temperature from Thermal Diode (Current Mode)

The pin of processor D- is connected to CPUD- and the pin D+ is connected to temperature sensor pin in the NCT5532D. A bypass capacitor C=2200pF should be added to filter the high frequency noise. The configuration registers to select a thermal diode temperature sensor and the measurement method are found at Bank 0, index 5Dh and 5Eh.

8.5.3.4. Temperature Reading

NCT5532D has 6 temperature reading can monitor different temperature sources (ex. CPUTIN, AUXTIN, PECI…etc).

	SMIOVT1	**SMIOVT2**
Temperature source select	Bank6,index21 bit[4:0] default: SYSTIN	Bank6, index22 bit[4:0] default:CPUTIN
Temperature reading	Bank0, index27	Bank1, index50 & index51 bit7

Note. If the temperature source is selecting to PECI, please set Bank0 Index AEh first for reading correct value.

8.6 PECI

PECI (Platform Environment Control Interface) is a new digital interface to read the CPU temperature of Intel® CPUs. With a bandwidth ranging from 2 Kbps to 2 Mbps, PECI uses a single wire for self-clocking and data transfer. By interfacing to the Digital Thermal Sensor (DTS) in the Intel® CPU, PECI reports a negative temperature (in counts) relative to the processor's temperature at which the thermal control circuit (TCC) is activated. At the TCC Activation temperature, the Intel CPU will operate at reduced performance to prevent the device from thermal damage.

PECI is one of the temperature sensing methods that the NCT5532D supports. The NCT5532D contains a PECI master and reads the CPU PECI temperature. The CPU is a PECI client.

The PECI temperature values returning from the CPU are in "counts" which are approximately linear in relation to changes in temperature in degrees centigrade. However, this linearity is approximate and cannot be guaranteed over the entire range of PECI temperatures. For further information, refer to the PECI specification. All references to "temperature" in this section are in "counts" instead of "°C".

Figure 8-8 PECI Temperature shows a typical fan speed (PWM duty cycle) and PECI temperature relationship.

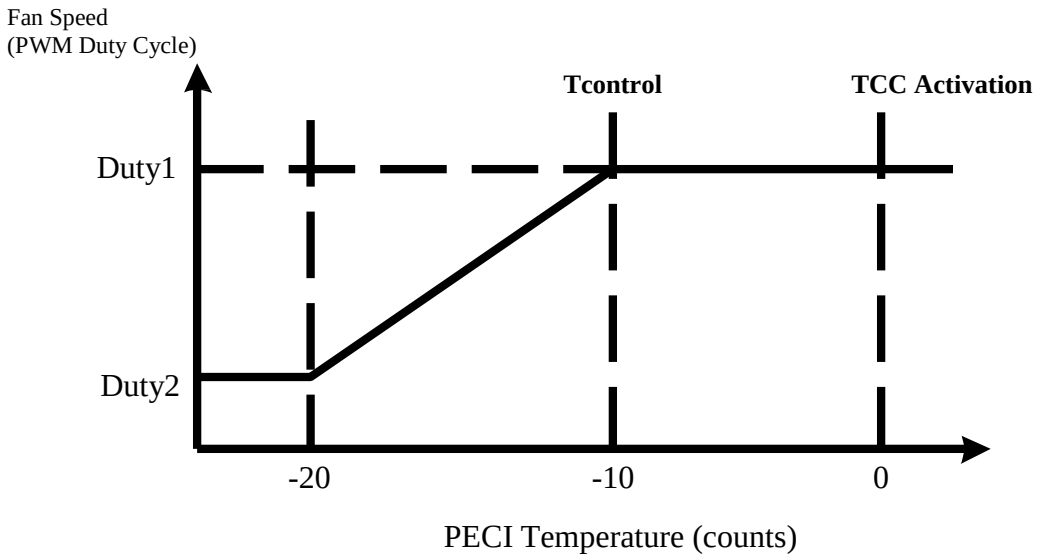

Figure 8-8 PECI Temperature

In this illustration, when PECI temperature is -20, the PWM duty cycle for fan control is at Duty2. When CPU is getting hotter and the PECI temperature is -10, the PWM duty cycle is at Duty1.

At Tcontrol PECI temperature, the recommendation from Intel is to operate the CPU fan at full speed. Therefore Duty1 is 100% if this recommendation is followed. The value of Tcontrol can be obtained by reading the related Machine Specific Register (MSR) in the Intel CPU. The Tcontrol MSR address is usually in the BIOS Writer's guide for the CPU family in question. Refer to the relevant CPU documentation from Intel for more information. In this example, Tcontrol is -10.

When the PECI temperature is below -20, the duty cycle is fixed at Duty2 to maintain a minimum (and constant) RPM for the CPU fan.

The device also provides an offset register to 'shift' the negative PECI readings to positive values. The offset registers are called "Tbase", which are located at Bank7 Index 09h for Agent0 and Bank7 Index 0Ah for Agent1. All default values of these Tbase registers are 8'h00. The unit of the Tbase register contents is "count" to match that of PECI values. The resultant value (Tbase + PECI) should not be interpreted as the "temperature" (whether in count or °C) of the PECI client (CPU).

The Figure 8-9 Temperature and Fan Speed Relation after Tbase Offsets, shows the temperature and fan-speed relationship after Tbase offset is applied (based on Figure 8-8 PECI Temperature). This view is from the perspective of the NCT5532D fan control circuit.

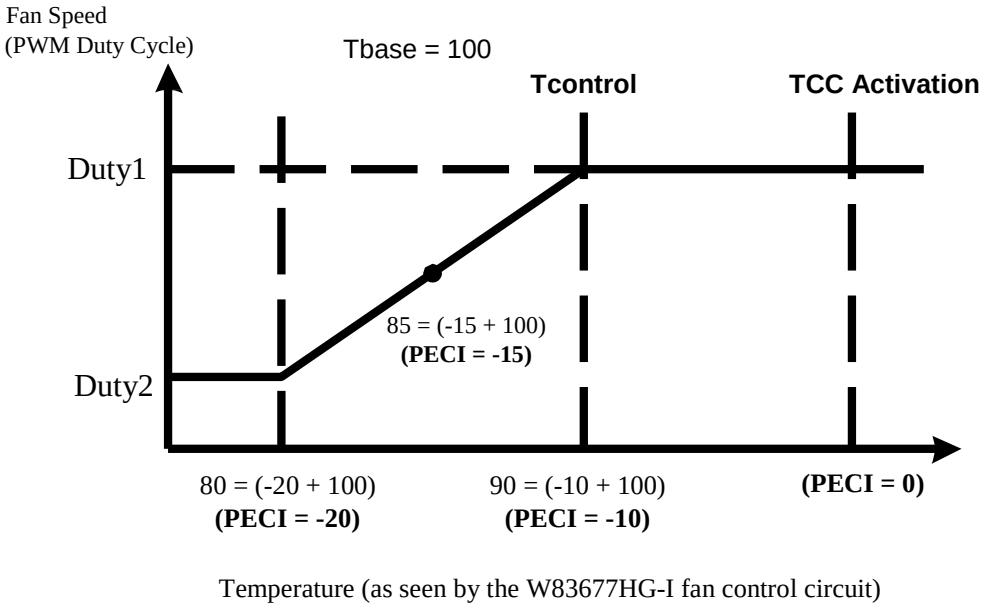

Figure 8-9 Temperature and Fan Speed Relation after Tbase Offsets

Assuming Tbase is set to 100 and the PECI temperature is -15 , the real-time temperature value to the fan control circuit will be 85 (-15 + 100). The value of 55 (hex) will appear in the relevant real-time temperature register.

While using Smart Fan control function of NCT5532D, BIOS/software can include Tbase in determining the thresholds (limits). In this example, assuming Tcontrol is -10 and Tbase is set to 100 (1), the threshold temperature value corresponding to the "100% fan duty-cycle" event is 90 (-10+100). The value of 5A (hex) should be written to the relevant threshold register.

Tcontrol is typically -10 to -20 for PECI-enabled CPUs. Base on that, a value of 85 ~100 for Tbase could be set for proper operation of the fan control circuit. This recommendation is applicable for most designs. In general, the concept presented in this section could be used to determine the optimum value of Tcontrol to match the specific application.

8.7 Fan Speed Measurement and Control

This section is divided into two parts, one to measure the speed and one to control the speed.

8.7.1 Fan Speed Reading

The fan speed reading at:

-	FAN COUNT READING		FAN RPM READING	
-	13-bit		16-bit	
	[12:5]	[4:0]	[15:8]	[7:0]
SYSFANIN	Bank4, indexB0	Bank4, indexB1	Bank4, indexC0	Bank4, indexC1
CPUFANIN	Bank4, indexB2	Bank4, indexB3	Bank4, indexC2	Bank4, indexC3

8.7.2 Fan Speed Calculation by Fan Count Reading

In 13-bit fan count reading, please read high byte first then low byte.

Fan speed RPM can be evaluated by the following equation.

$$RPM = \frac{1.35 \times 10^6}{Count}$$

8.7.3 Fan Speed Calculation by Fan RPM Reading

In 16-bit fan RPM reading, please read high byte first then low byte.

Fan speed RPM can be evaluated by translating 16-bit RPM reading from hexadecimal to decimal.

Register reading 0x09C4h = 2500 RPM

8.7.4 Fan Speed Control

The NCT5532D has 2 output pins for fan control, Only SYSFANOUT offers PWM duty cycle and DC voltage to control the fan speed. The output type (PWM or DC) of each pin is configured by Bank0 index 04h, bits 0 for SYSFANOUT.

	SYSFANOUT	CPUFANOUT
Output Type Select	Bank0, index04 bit0 **0: PWM output** **1: DC output (default)**	**Only PWM output**
Output Type Select (in PWM output)	CR24 bit4 0: open-drain (default) 1: push-pull	CR24 bit3 0: open-drain (default) 1: push-pull
PWM Output Freqency	Bank0, Index00	Bank0, Index02
Fan Control Mode Select	Bank1, index02, bit[7:4] 0h: Manual mode (def.) 1h: Thermal Cruise	Bank2, index02, bit[7:4] 0h: Manual mode(def.) 1h: Thermal Cruise

		2h: Speed Cruise 4h: SMART FAN IV	2h: Speed Cruise 4h: SMART FAN IV
Output Value (write)	**PWM output (Duty)**	Bank1, index09 bit[7:0]	Bank2, index09 bit[7:0]
	DC output (Voltage)	Bank1, index09 bit[7:2]	
Current Output Value (read only)		Bank0, index01	Bank0, index03

For PWM, the duty cycle is programmed by eight-bit registers at Bank1 Index 09h for SYSFANOUT, Bank2 Index 09h for CPUFANOUT. The duty cycle can be calculated using the following equation:

$$\text{Dutycycle}(\%) = \frac{\text{Programmed 8-bit Register Value}}{255} \times 100\%$$

The default duty cycle is 7Fh, or 50% for SYSFANOUT and CPUFANOUT.

Note.The default speed of fan output is specified in registers CR[E0h] and CR[E1h] of Logical Device B.

The PWM clock frequency is programmed at Bank0 Index 00h, Index 02h.

For DC, the NCT5532D has a six bit digital-to-analog converter (DAC) that produces 0 to 2.048 Volts DC. The analog output is programmed at Bank1 Index 09h bit [7:2] for SYSFANOUT. The analog output can be calculated using the following equation:

$$\text{OUTPUT Voltage (V)} = Vref \times \frac{\text{Programmed 6-bit Register Value}}{64}$$

The default value is 111111YY, or nearly 2.048 V, and Y is a reserved bit.

8.7.5 SMART FAN™ Control

The NCT5532D supports various different fan control features:

- SMART FAN™ I (Thermal Cruise & Speed Cruise)
- SMART FAN™ IV
- SMART FAN™ IV Close-Loop Fan Control RPM mode

	SYSFANOUT	CPUFANOUT
Fan Control Mode Select	Bank1, index02, bit[7:4] 0h: Manual mode (def.) 1h: Thermal Cruise 2h: Speed Cruise 4h: SMART FAN IV	Bank2, index02, bit[7:4] 0h: Manual mode(def.) 1h: Thermal Cruise 2h: Speed Cruise 4h: SMART FAN IV

8.7.6 Temperature Source & Reading for Fan Control

Select temperature source for each fan control output:

	SYSFANOUT	CPUFANOUT
Fan Control Temperature Source Select	Bank1, index00 bit[4:0] Default: SYSTIN	Bank2, index00 bit[4:0] Default: CPUTIN
Fan Control Temperature Reading	Bank0, index73 & Bank0, index74 bit7	Bank0, index75 & Bank0, index76 bit7

Note. If the temperature source is selecting to PECI, please set Bank0 Index AEh first for reading correct value.

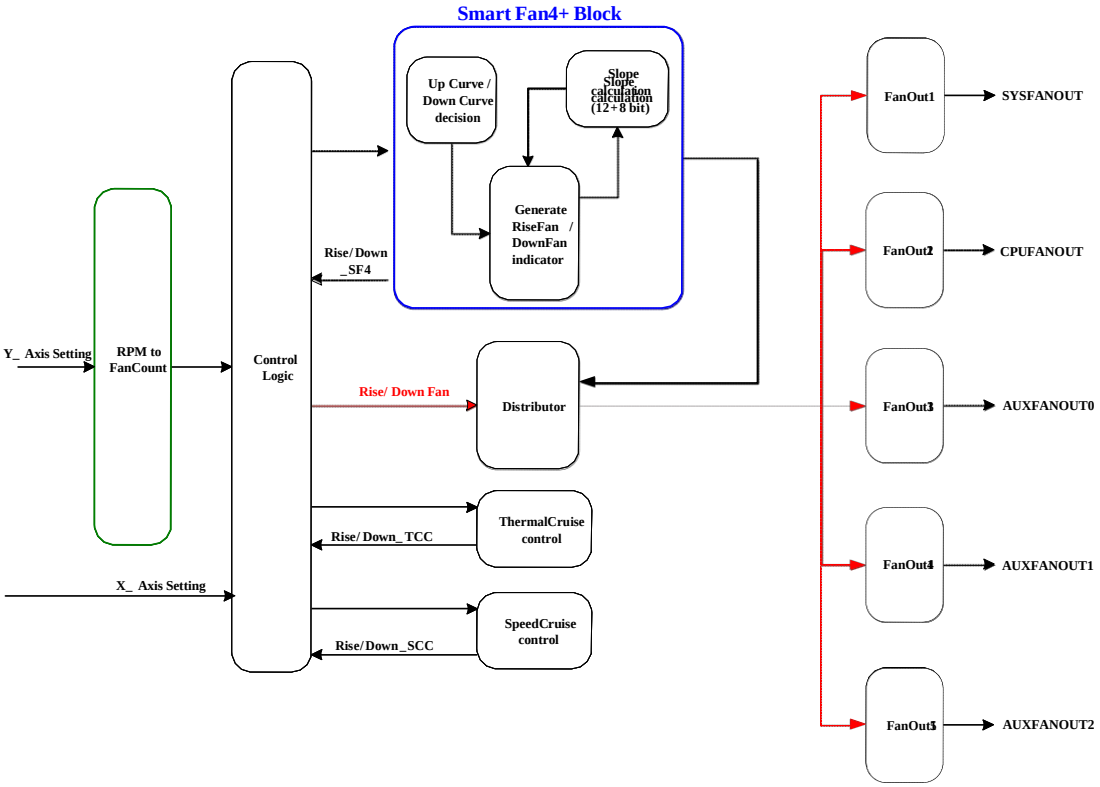

Figure 8-10 SMART FAN^{TM} Function Block Diagram

8.8 SMART FAN^{TM} I

8.8.1 Thermal Cruise Mode

Thermal Cruise mode controls the fan speed to keep the temperature in a specified range. First, this range is defined in BIOS by a temperature and the interval (e.g., 55 °C ± 3 °C). As long as the current temperature remains below the low end of this range (i.e., 52 °C), the fan is off. Once the temperature exceeds the low end, the fan turns on at a speed defined in BIOS (e.g., 20% output). Thermal Cruise mode then controls the fan output according to the current temperature. Three conditions may occur:

(1) If the temperature still exceeds the high end, fan output increases slowly. If the fan is operating at full speed but the temperature still exceeds the high end, a warning message is issued to protect the system.

(2) If the temperature falls below the high end (e.g., 58°C) but remains above the low end (e.g., 52 °C), fan output remains the same.

(3) If the temperature falls below the low end (e.g., 52 °C), fan output decreases slowly to zero or to a specified "stop value".
This "stop value" is enabled by the Bank1, Index00h, Bit7 for SYSFANOUT; Bank2, Index00h, Bit7 for CPUFANOUT.
The "stop value" itself is separately specified in Bank1 Index05h, Bank2 Index05h.
The "stop time" means fan remains at the stop value for the period of time also separately defined in Bank1 Index07h, Bank2 Index07h.
Note. The function only support for Thermal Cruise Mode.

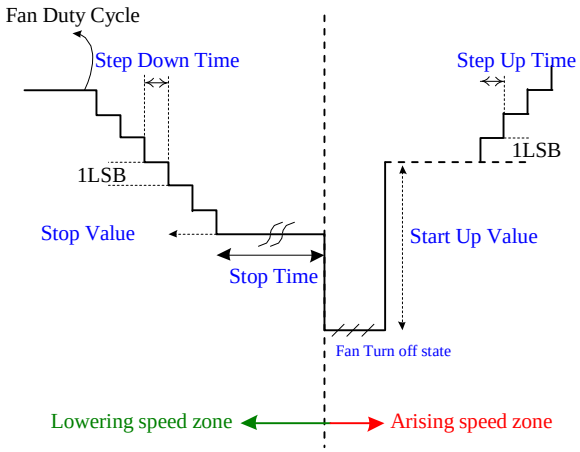

Figure 8-11 Thermal Cruise™ Mode Parameters Figure

In general, Thermal Cruise mode means

- If the current temperature is higher than the high end, increase the fan speed.
- If the current temperature is lower than the low end, decrease the fan speed.
- Otherwise, keep the fan speed the same.

The following figures illustrate two examples of Thermal Cruise mode.

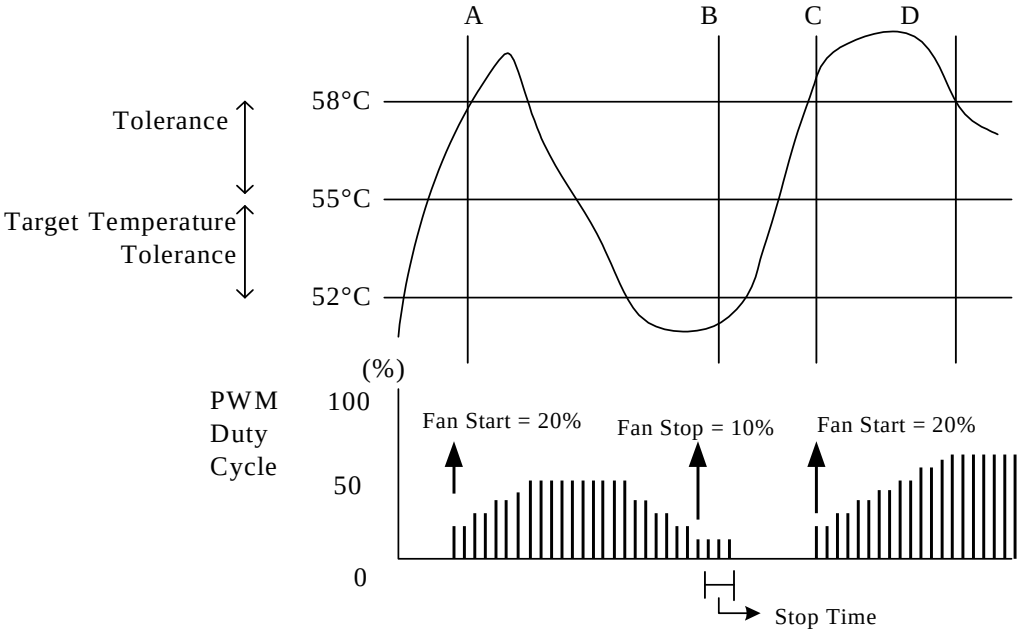

Figure 8-12 Mechanism of Thermal Cruise™ Mode (PWN Duty Cycle)

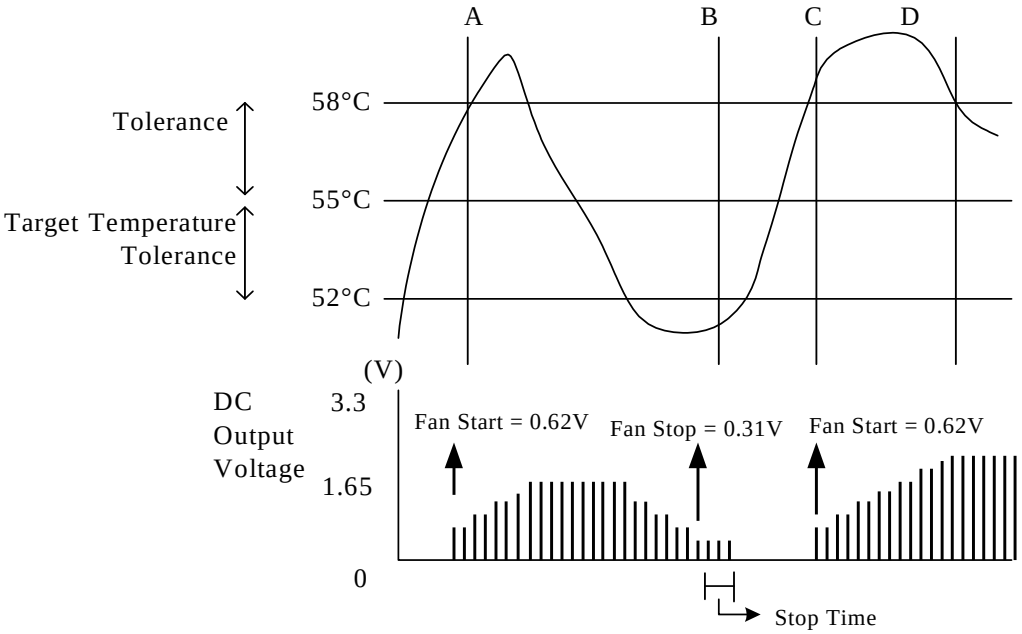

Figure 8-13 Mechanism of Thermal Cruise™ Mode (DC Output Voltage)

8.8.2 Speed Cruise Mode

Speed Cruise mode keeps the fan speed in a specified range. First, this range is defined in BIOS by a fan speed count (the amount of time between clock input signals, not the number of clock input signals in a period of time) and an interval (e.g., 160 ± 10). As long as the fan speed count is in the specified range, fan output remains the same. If the fan speed count is higher than the high end (e.g., 170), fan output increases to make the count lower. If the fan speed count is lower than the low end (e.g., 150), fan output decreases to make the count higher. One example is illustrated in this figure.

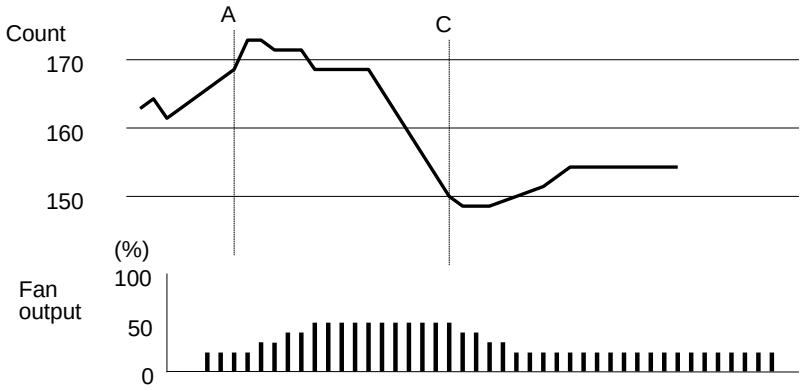

Figure 8-14 Mechanism of Fan Speed Cruise™ Mode

The following tables show current temperatures, fan output values and the relative control registers at Thermal Cruise and Fan Speed mode.

Table 8-2 Relative Registers – at Thermal CruiseTM Mode

THERMAL CRUISE MODE	TARGET TEMPERATURE	TOLERANCE	START-UP VALUE	STOP VALUE	KEEP MIN. FAN OUTPUT VALUE	STOP TIME	STEP- UP TIME	STEP-DOWN TIME
SYSFANOUT	Bank 1, index 01h bit[7:0]	Bank 1, index 02h Bit[2:0]	Bank 1, index 06h	Bank 1, index 05h	Bank 1, Index 00h, bit7	Bank 1, index 07h	Bank 1, index 03h	Bank 1, index 04h
CPUFANOUT	Bank 2, index 01h bit[7:0]	Bank 2, index 02h Bit[2:0]	Bank 2, index 06h	Bank 2, index 05h	Bank 2, Index 00h, bit7	Bank 2, index 07h	Bank 2, index 03h	Bank 2, index 04h

THERMAL CRUISE MODE	CRITICAL TEMPERATURE	ENABLE THERMAL CRUISE MODE
SYSFANOUT	Bank 1, index 35h	Bank 1, Index 02h, bit[7:4] = 01h
CPUFANOUT	Bank 2, Index 35h	Bank 2, Index 02h, bit[7:4] = 01h

Table 8-3 Relative Registers – at Speed CruiseTM Mode

SPEED CRUISE MODE	TARGET-SPEED COUNT_L	TARGET-SPEED COUNT_H	TOLERANCE_L	TOLERANCE2_H	STEP- UP TIME	STEP-DOWN TIME	ENABLE SPEED CRUISE MODE
SYSFANOUT	Bank 1, Index 01h	Bank 1, Index 0C bit[3:0]	Bank 1, Index 02 bit[2:0]	Bank 1, Index 0C bit[6:4]	Bank 1, Index 03h	Bank 1, Index 04h	Bank 1, Index 02h bit[7:4] = 02h
CPUFANOUT	Bank 2, Index 01h	Bank 2, Index 0C bit[3:0]	Bank 2, Index 02 bit[2:0]	Bank 2, Index 0C bit[6:4]	Bank 2, Index 03h	Bank 2, Index 04h	Bank 2, Index 02h bit[7:4] = 02h

8.9 SMART FAN^{TM} IV & Close Loop Fan Control Mode

SMART FAN^{TM} IV and Close Loop Fan Control Mode offer 3 slopes to control the fan speed.

Set **Critical Temperature, Bank1 Index 35$_{HEX}$, Bank2 Index 35$_{HEX}$.**

- Set the **Relative Register-at SMART FAN^{TM} IV Control Mode Table**
  If fan control mode is set as Close Loop Fan Control, the unit step is 50RPM. So the maximum controllable RPM is 50*255=12,750RPM.
- Set Tolerance **of Target Temperature, Bank1 Index 02$_{HEX}$ bit [2:0], Bank2 Index 02$_{HEX}$ bit [2:0]**.

The 3 slopes can be obtained by setting FanDuty1/RPM1~FanDuty4/RPM4 and T1~T4 through the registers. When the temperature rises, FAN Output will calculate the target FanDuty/RPM based on the current slope. For example, assuming Tx is the current temperature and Ty is the target, then

The slope:

$$X2 = \frac{(FanDuty3/RPM3) - (FanDuty2/RPM2)}{(T3 - T2)}$$

Table 8-4 Relative Register-at SMART FAN™ IV Control Mode

DESCRIPTION	T1	T2	T3	T4
SYSFANOUT	Bank 1, Index 21h	Bank 1, Index 22h	Bank 1, Index 23h	Bank 1, Index 24h
CPUFANOUT	Bank 2, Index 21h	Bank 2, Index 22h	Bank 2, Index 23h	Bank 2, Index 24h
DESCRIPTION	**FD1/PWM1**	**FD2/PWM2**	**FD3/PWM3**	**FD4/PWM4**
SYSFANOUT	Bank 1, Index 27h	Bank 1, Index 28h	Bank 1, Index 29h	Bank 1, Index 2Ah
CPUFANOUT	Bank 2, Index 27h	Bank 2, Index 28h	Bank 2, Index 29h	Bank 2, Index 2Ah

DESCRIPTION	CRITICAL TEMPERATURE	CRITICAL TOLERANCE	TEMPERATURE TOLERANCE	ENABLE RPM MODE	RPM TOLERANCE	ENABLE RPM HIGH MODE
SYSFANOUT	Bank 1, Index 35h	Bank 1, Index 38h, bit[2:0]	Bank 1, Index 02h, bit[2:0]	Bank 6, Index 00h, Bit0	Bank 6, index 01h	Bank 6, Index 06h, Bit0
CPUFANOUT	Bank 2, Index 35h	Bank 2, Index 38h, bit[2:0]	Bank 2, Index 02h, bit[2:0]	Bank 6, Index 00h, Bit1	Bank 6, index 02h	Bank 6, Index 06h, Bit1

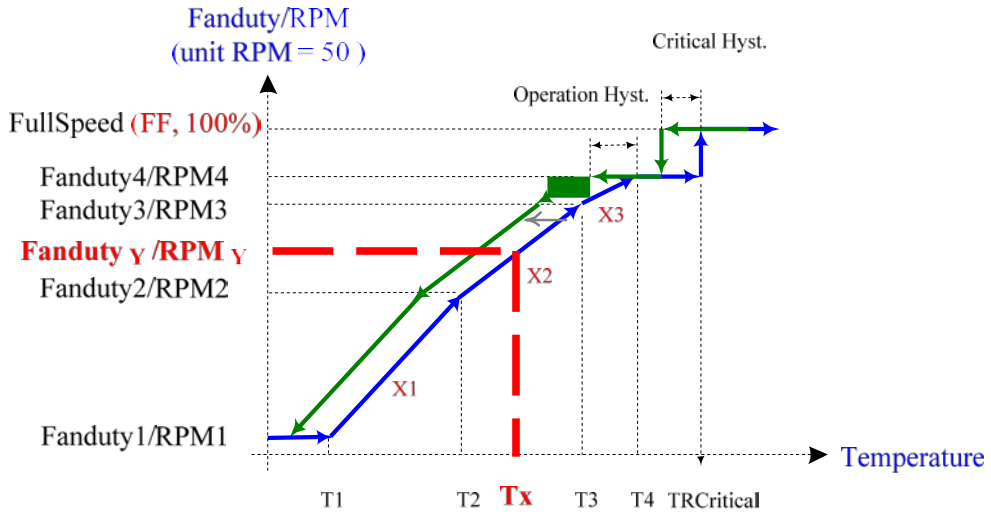

Figure 8-15 SMART FAN™ IV & Close Loop Fan Control Mechanism

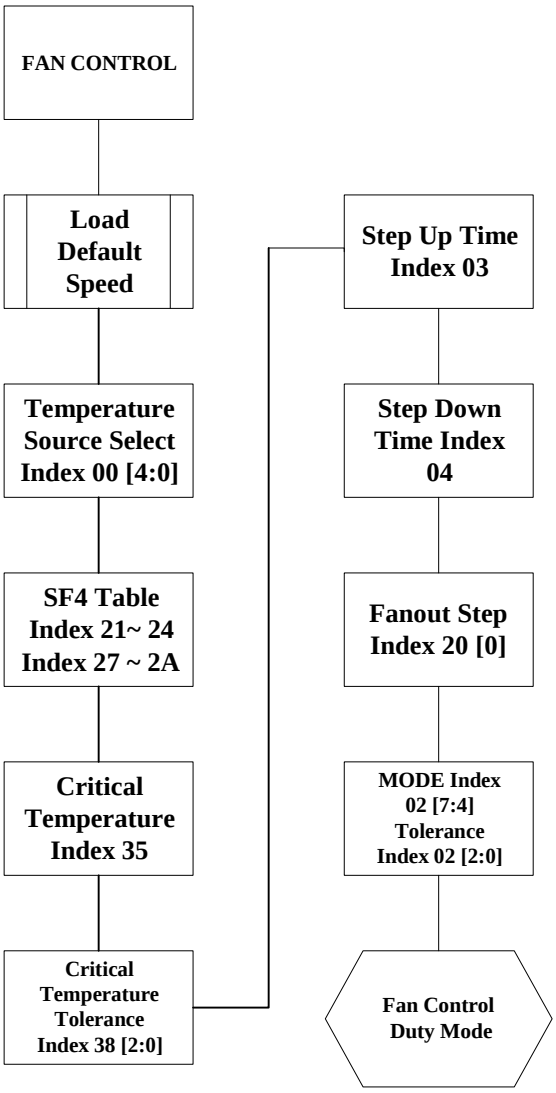

Figure 8-16 Fan Control Duty Mode Programming Flow

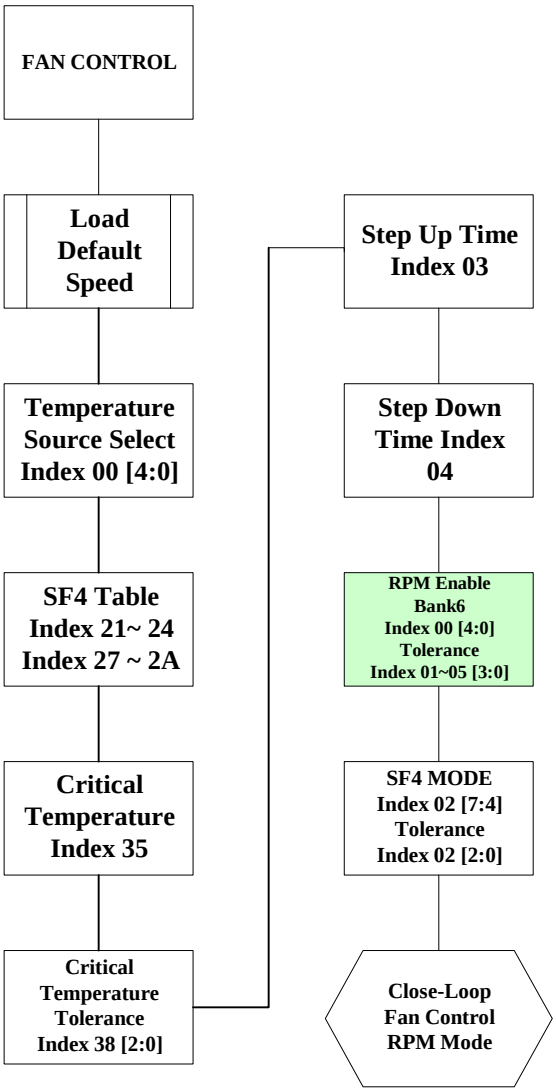

Figure 8-17 Close-Loop Fan Control RPM mode Programming Flow

8.9.1 Step Up Time / Step Down Time

SMART FAN^{TM} IV is designed for the smooth operation of the fan. The Up Time / Down Time register defines the time interval between successive duty increases or decreases. If this value is set too small, the fan will not have enough time to speed up after tuning the duty and sometimes may result in unstable fan speed. On the other hand, if Up Time / Down Time is set too large, the fan may not work fast enough to dissipate the heat.

8.9.2 Fan Output Step

The “Fanout Step” itself is separately specified in Bank1 Index20h bit0 for SYSFANOUT, Bank2 Index20h bit0 for CPUFANOUT.

This example for Fanout Step exposition:

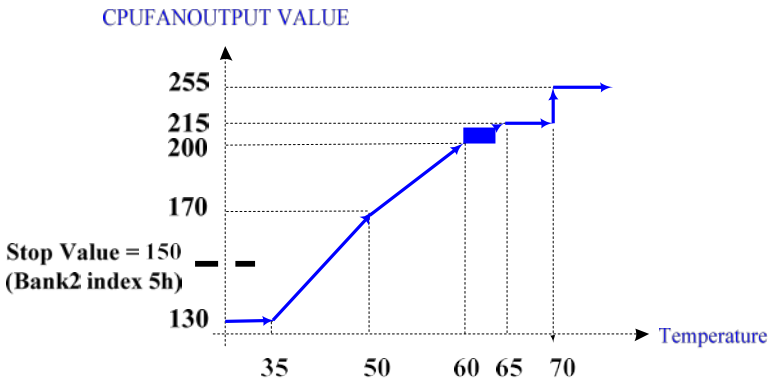

Figure 8-18 CPUFAN SMART FAN^{TM} IV Table Parameters Figure

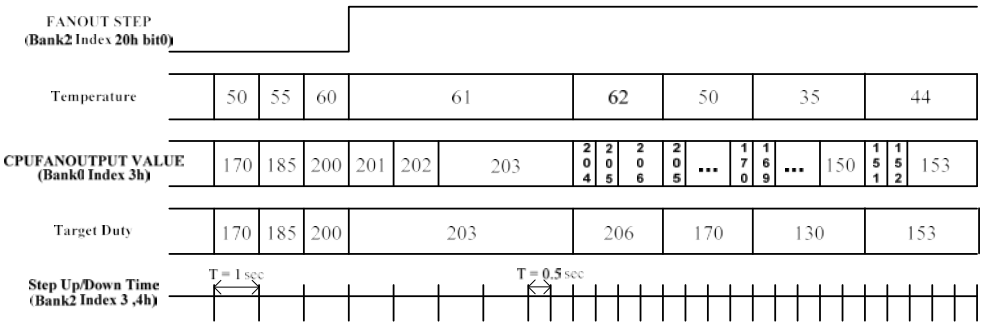

Figure 8-19 Fanout Step Relation of CPUFANOUT

8.9.3 Revolution Pulse Selection

The NCT5532D supports four RPM output of the pulses selection function for different type of FAN which has the character of different pulses per revolution.The others could be set by HM register at Bank6, Index44, Bit1-0 for SYSFANIN; Index45, Bit1-0 for CPUFANIN. All default value of pulse selection registers are 2 pulses of one revolution.

Setting description for “Pulse Selections Bits”:

00: 4 pulses per revolution
01: 1 pulse per revolution
10: 2 pulses per revolution (default)
11: 3 pulses per revolution

8.9.4 Weight Value Control

The NCT5532D supports weight value control for fan duty output. By register configuration, the results of weight value circuit can be added to the fan duty of SMART FAN^{TM} I or IV and output to the fan. Take CPUFANOUT for example, if SMART FAN^{TM} IV is selected, CPUTIN is the temperature source, and weight value control is enabled, SMART FAN^{TM} IV will calculate the output duty, and weight value circuit will calculate the corresponding weight value based on SYSTIN. As the SYSTIN temperature rises, its corresponding weight value increases. Then, the two values will be summed up and output to CPU fan. In other words, the CPU fan duty is affected not only by the CPUTIN but also the SYSTIN temperature.

Figure 8-20 SYS TEMP and Weight Value Relations shows the relation between the SYSTIN temperature and the weight value. Tolerance setup is offered on each change point to avoid weight value fluctuation resulted from

SYSTIN temperature change. The weight value will increase by one weight value step only when the SYSTIN temperature is higher than the point value plus tolerance. Likewise, the weight value decreases by one weight value step only when the SYSTIN temperature is lower than the point value minus tolerance.

Nots：This relative register should not be zero and not support negative temperature.

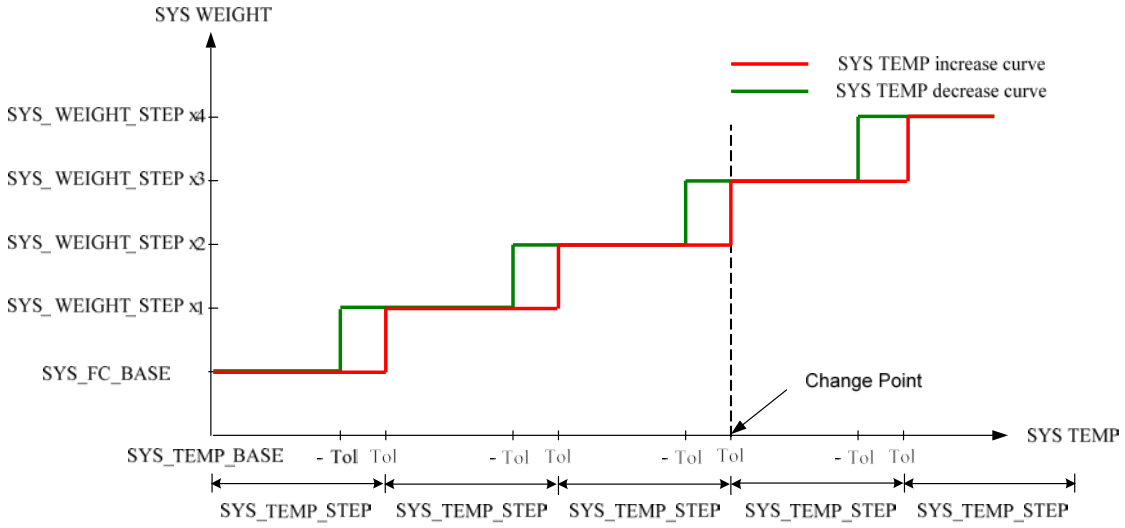

Figure 8-20 SYS TEMP and Weight Value Relations

Table 8-5 Relative Register-at Weight Value Control

DESCRIPTION	ENABLE WEIGHT MODE	WEIGHT TEMPERATURE SOURCE SELECT
SYSFANOUT	Bank 1, Index 39h, bit7	Bank 1, Index 39h, bit[4:0]
CPUFANOUT	Bank 2, Index 39h, bit7	Bank 2, Index 39h, bit[4:0]

DESCRIPTION	TEMP BASE	DUTY BASE	TEMP STEP	TEMP STEP TOLERANCE	WEIGHT STEP
SYSFANOUT	Bank 1, Index 3Dh	Bank 1, Index 3Eh	Bank 1, Index 3Ah	Bank 1, Index 3Bh	Bank 1, Index 3Ch
CPUFANOUT	Bank 2, Index 3Dh	Bank 2, Index 3Eh	Bank 2, Index 3Ah	Bank 2, Index 3Bh	Bank 2, Index 3Ch

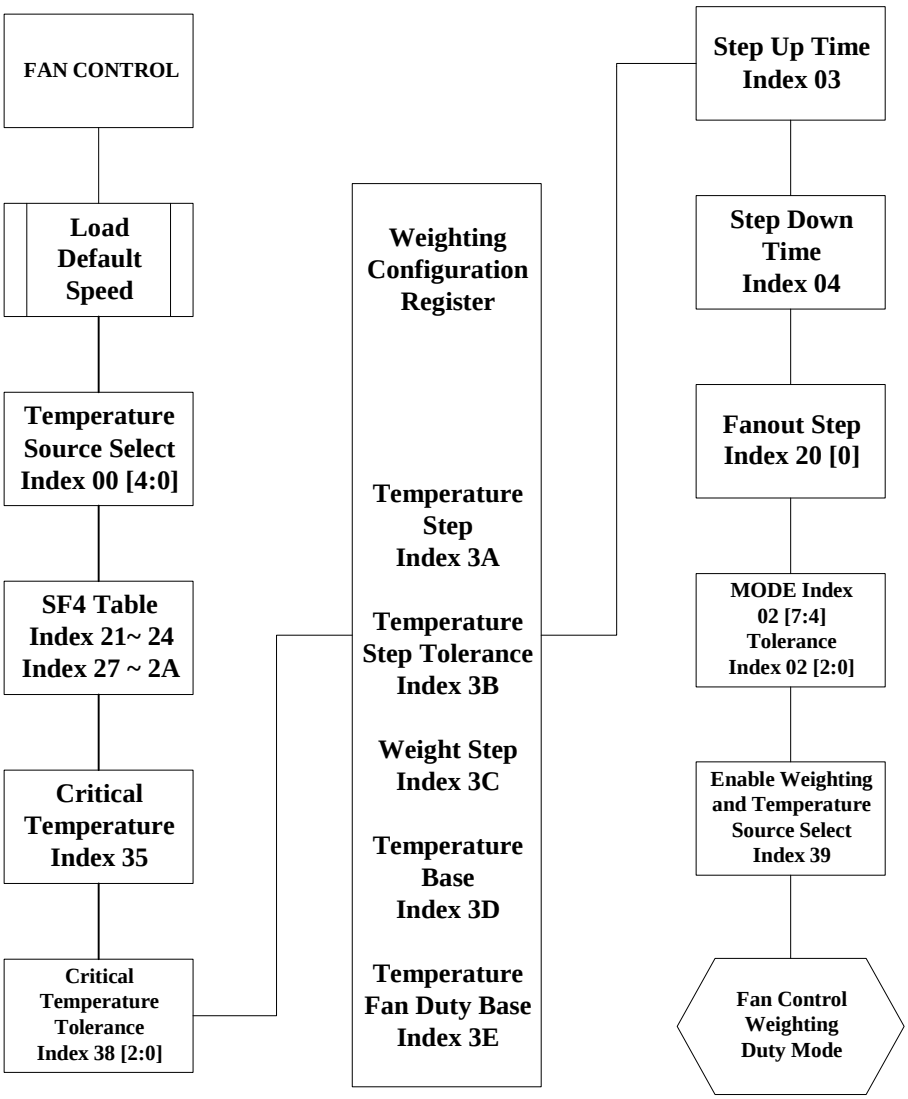

Figure 8-21 Fan Control Weighting Duty Mode Programming Flow

8.10 Alert and Interrupt

NCT5532D supports 6 Temperature Sensors for interrupt detection depending on selective monitor temperature source.

	SMIOVT1	SMIOVT2
Temperature source select	Bank6, index21 bit[4:0] default: SYSTIN	Bank6, index22 bit[4:0] default: CPUTIN
Temperature reading (2's	Bank0, index27	Bank1, index50 &

complement)		index51 bit7
Temperature High Limit	Bank0, index39	Bank1, index55 & index56 bit7
Temperature Low Limit	Bank0, index3A	Bank1, index53 & index54 bit7

SMIOVT Relative Temperature Registers

8.10.1 SMI# Interrupt Mode

The SMI#/OVT# pin is a multi-function pin. It can be in HM_SMI# mode or in OVT# mode by setting Configuration Register CR24h, bit 2. In HM_SMI# mode, it can monitor voltages, fan counts, or temperatures.

8.10.2 Voltage SMI# Mode

The SMI# pin can create an interrupt if a voltage exceeds a specified high limit or falls below a specified low limit. This interrupt must be reset by reading all the interrupt status registers, or subsequent events do not generate interrupts. This mode is illustrated in the following figure.

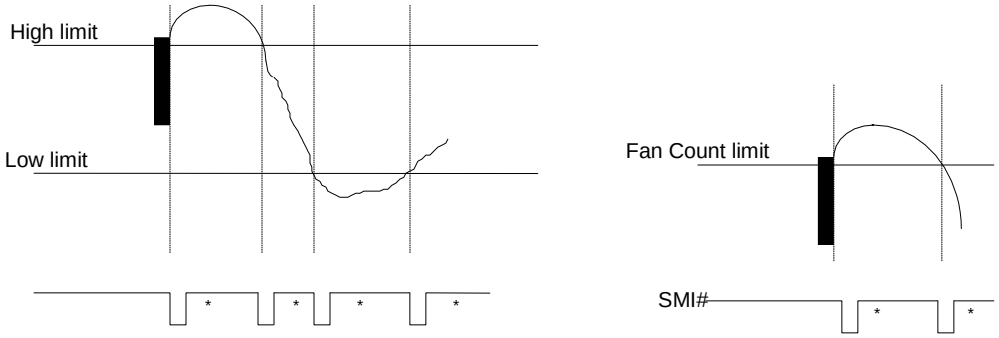

*Interrupt Reset when Interrupt Status Registers are read

Figure 8-22 SMI Mode of Voltage and Fan Inputs

8.10.3 Fan SMI# Mode

The SMI# pin can create an interrupt if a fan count crosses a specified fan limit (rises above it or falls below it). This interrupt must be reset by reading all the interrupt status registers, or subsequent events do not generate interrupts. This mode is illustrated in the figure above.

8.10.4 Temperature SMI# Mode

The SMI# pin can create interrupts that depend on the temperatures measured by CPUTIN, and AUXTIN.

8.10.4.1. Temperature Sensor 1 SMI# Interrupt (Default: SYSTIN)

The SMI# pin has four interrupt modes with Temperature Sensor 1.

(1) Shut-down Interrupt Mode

This mode is enabled by setting Bank0 Index 40h, bit 4 to one.

In this mode, the SMI# pin can create an interrupt when the current temperature rises above T_{OL} or Shut-down mode high limit temperature, and when the current temperature falls below T_{HYST} or Shut-down mode low limit temperature. Once the temperature rises above T_{OL}, however, and generates an interrupt, this mode does not generate additional interrupts, even if the temperature remains above T_{OL}, until the temperature falls below T_{HYST}. This interrupt must be reset by reading all the interrupt status registers, or subsequent events do not generate interrupts, except the first time current temperature rises above Shut-down mode high limit temperature. This is illustrated in the following figure.

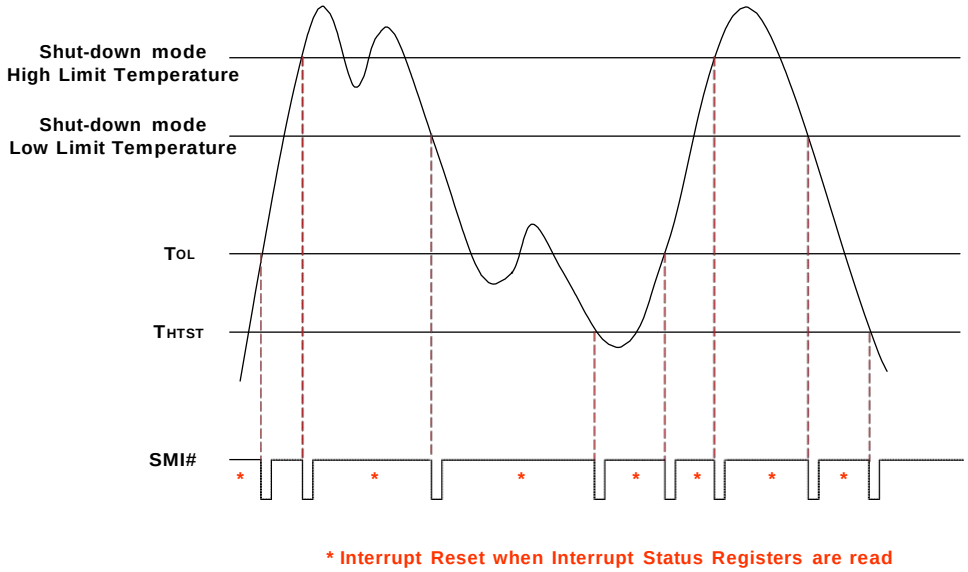

Figure 8-23 Shut-down Interrupt Mode

(2) Comparator Interrupt Mode

This mode is enabled by setting T_{HYST} (Temperature Hysteresis) to 127°C. This mode is enabled by setting Bank0 Index 40h, bit 4 to 0.

In this mode, the SMI# pin can create an interrupt as long as the current temperature exceeds T_O (Over Temperature). This interrupt can be reset by reading all the interrupt status registers, or subsequent events do not generate interrupts. If the interrupt is reset, the SMI# pin continues to create interrupts until the temperature goes below T_O. This is illustrated in the figure below.

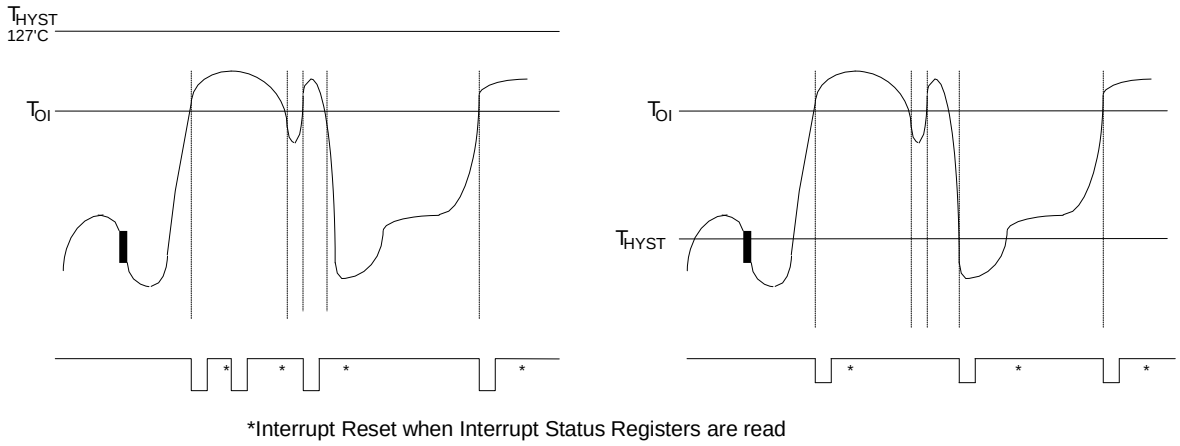

Comparator Interrupt Mode Two-Times Interrupt Mode

Figure 8-24 SMI Mode

(3) Two-Times Interrupt Mode

This mode is enabled by setting T_{HYST} (Temperature Hysteresis) lower than T_O and setting Bank0 Index 4Ch, bit 5 to zero. This mode is enabled by setting Bank0 Index 40h, bit 4 to 0.

In this mode, the SMI# pin can create an interrupt when the current temperature rises above T_O or when the current temperature falls below T_{HYST}. Once the temperature rises above T_O, however, and generates an interrupt, this mode does not generate additional interrupts, even if the temperature remains above T_O, until the temperature falls below T_{HYST}. This interrupt must be reset by reading all the interrupt status registers, or subsequent events do not generate interrupts. This is illustrated in the figure above.

Figure 3- **One-Time Interrupt Mode**

This mode is enabled by setting T_{HYST} (Temperature Hysteresis) lower than T_O and setting Bank0 Index 4Ch, bit 5 to one. This mode is enabled by setting Bank0 Index 40h, bit 4 to 0.

In this mode, the SMI# pin can create an interrupt when the current temperature rises above T_O. Once the temperature rises above T_O, however, and generates an interrupt, this mode does not generate additional interrupts, even if the temperature remains above T_O, until the temperature falls below T_{HYST}. This interrupt must be reset by reading all the interrupt status registers, or subsequent events do not generate interrupts. This is illustrated in the following figure.

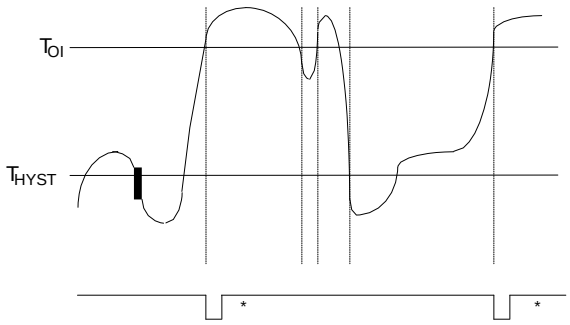

*Interrupt Reset when Interrupt Status Registers are read

One-Time Interrupt Mode

Figure 8-25 SMI Mode of SYSTIN II

8.10.4.2. SMI# Interrupt of Temperature Sensor 2 (Default: CPUTIN) and Temperature Sensor 3 (Default: AUXTIN) and Temperature Sensor 4 (Default: SYSTIN) and Temperature Sensor 5 (Default: SYSTIN) and Temperature Sensor 6 (Default: SYSTIN).

The SMI# pin has 3 interrupt modes with Temperature Sensor 2~6.

(1) Shut-down Interrupt Mode

This mode is enabled by Bank0 Index 40h, bit5 to one for Temperature Sensor 2; Bank0 Index 40h, bit6 to one for Temperature Sensor 3; Bank6 Index 74h, bit1 to one for Temperature Sensor 4; Bank6 Index 79h, bit1 to one for Temperature Sensor 5 and Bank6 Index 7Eh, bit1 to one for Temperature Sensor 6.

In this mode, the SMI# pin can create an interrupt when the current temperature rises above T_{OL} or Shut-down mode high limit temperature, and when the current temperature falls below T_{HYST} or Shut-down mode low limit temperature. Once the temperature rises above T_{OL}, however, and generates an interrupt, this mode does not generate additional interrupts, even if the temperature remains above T_{OL}, until the temperature falls below T_{HYST}. This interrupt must be reset by reading all the interrupt status registers, or subsequent events do

not generate interrupts, except the first time current temperature rises above Shut-down mode high limit temperature. This is illustrated in the following figure.

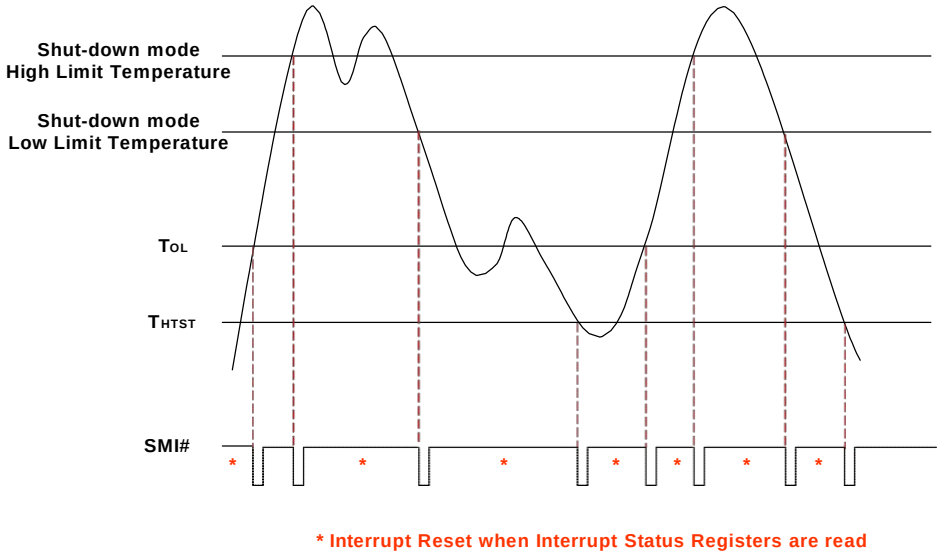

Figure 8-26 Shut-down Interrupt Mode

(2) Comparator Interrupt Mode

This mode is enabled by setting Bank0 Index 4Ch, bit 6, to one.

In this mode, the SMI# pin can create an interrupt when the current temperature exceeds T_O (Over Temperature) and continues to create interrupts until the temperature falls below T_{HYST}. This interrupt can be reset by reading all the interrupt status registers, or subsequent events do not generate interrupts. This is illustrated in the figure below.

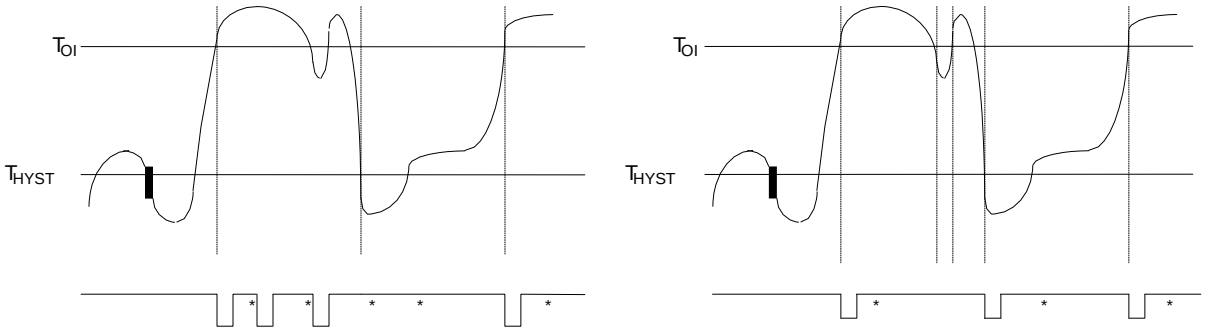

*Interrupt Reset when Interrupt Status Registers are read

Comparator Interrupt Mode

Two-Times Interrupt Mode

Figure 8-27 SMI Mode of CPUTIN

(3) Two-Times Interrupt Mode

This mode is enabled by setting Bank0 Index 4Ch, bit 6, to zero.

In this mode, the SMI# pin can create an interrupt when the current temperature rises above T_O or when the current temperature falls below T_{HYST}. Once the temperature rises above T_O, however, and generates an

interrupt, this mode does not generate additional interrupts, even if the temperature remains above T_O, until the temperature falls below T_{HYST}. This interrupt must be reset by reading all the interrupt status registers, or subsequent events do not generate interrupts. This is illustrated in the figure above.

Table8-6 Relative Register of SMI functions

	SHUTDOWN MODE	**COMPARATOR MODE**	**TWO-TIME INTERRUPT MODE**	**ONE-TIME INTERRUPT MODE**
SMIOVT1	Bank0,Index40_Bit4 (EN_WS=1) Bank0,Index43 _Bit4(TIN=0) Bank0,Index46 _Bit3 (Shut = 0)	Bank0,Index43_Bit4 (TIN=0) Bank0,Index3A (Thyst = 8'h7F)	Bank0,Index43_Bit4 (TIN=0) Bank0,Index4C_Bit5 (EN_T1_One = 0)	Bank0,Index43_ Bit4 Bank0,Index4C_ Bit5
SMIOVT2	Bank0,Index40_Bit5 (EN_WS=1) Bank0,Index43_ Bit5(TIN=0) Bank0,Index46_ Bit 4 (Shut = 0)	Bank0,Index43_Bit5 (TIN=0) Bank0,Index4C_ Bit6 (T2T3_INT=1)	Bank0,Index43_ Bit5(TIN=0) Bank0,Index4C_ Bit6 (T2T3_INT=0)	

Table 8-7 Relative Register of OVT functions

SMIOVT1	**SMIOVT2**
Bank0,Index18_Bit6=0 (Enable OVT output) **Bank0,Index18_Bit4** **0:** Comparator Mode (def.) **1:** Interrupt Mode **Bank0, Index18_Bit0** **0:** Start to monitor the source of SMIOVT1 temperature. **1:** Stop monitoring the source of SMIOVT1 temperature.	**Bank1, Index52_Bit0** **0:** Start to monitor the source of SMIOVT2 temperature. **1:** Stop monitoring the source of SMIOVT2 temperature. **Bank 0, Inedex4C_Bit 3** **0:** Disable SMIOVT2 temperature sensor over temperature output **1:** Enable SMIOVT2 temperature sensor over temperature output **Bank 1, Index52_Bit 1** **0:** Comparator Mode **1:** Interrupt Mode **Bank 1, Index52_Bit 3~4** Number of faults to detect before setting OVT# output.

8.10.5 OVT# Interrupt Mode

The SMI#/OVT# pin is a multi-function pin. It can be in SMI# mode or in OVT# mode by setting Configuration Register CR[24h], bit 2 to one or zero, respectively. In OVT# mode, it can monitor temperatures, and OVT pin could be enabled to OVT output by Bank0 Index 18h, bit 6 for Temperature Sensor 1(default: SYSTIN); Bank1 Index 52h, bit 1 for Temperature Sensor 2(default: CPUTIN); Bank2 Index 52h, bit1 for Temperature Sensor 3(default: AUXTIN); Bank6 Index 28h, bit1 for Temperature Sensor 4(default: SYSTIN); Bank6 Index 29h, bit1 for Temperature Sensor 5(default: SYSTIN)and Bank6 Index 2Ah, bit1 for Temperature Sensor 6(default: SYSTIN).

The OVT# pin has two interrupt modes, comparator and interrupt. The modes are illustrated in this figure.

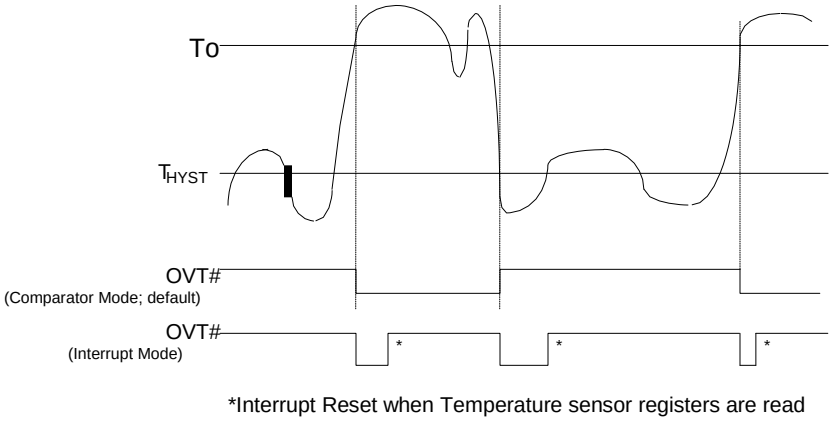

Figure 8-28 OVT# Modes of Temperature Inputs

If Bank0 Index 18h, bit 4, is set to zero, the OVT# pin is in comparator mode. In comparator mode, the OVT# pin can create an interrupt once the current temperature exceeds T_O and continues to create interrupts until the temperature falls below T_{HYST}. The OVT# pin is asserted once the temperature has exceeded T_O and has not yet fallen below T_{HYST}.

If Bank0 Index 18h, bit 4, is set to one, the OVT# pin is in interrupt mode. In interrupt mode, the OVT# pin can create an interrupt once the current temperature rises above T_O or when the temperature falls below T_{HYST}. Once the temperature rises above T_O, however, and generates an interrupt, this mode does not generate additional interrupts, even if the temperature remains above T_O, until the temperature falls below T_{HYST}. This interrupt must be reset by reading all the interrupt status registers. The OVT# pin is asserted when an interrupt is generated and remains asserted until the interrupt is reset.

9. HARDWARE MONITOR REGISTER SET

The base address of the Address Port and Data Port is specified in registers CR[60h] and CR[61h] of Logical Device B, the hardware monitor device. CR[60h] is the high byte, and CR[61h] is the low byte. The Address Port and Data Port are located at the base address, plus 5h and 6h, respectively. For example, if CR[60h] is 02h and CR[61h] is 90h, the Address Port is at 0x295h, and the Data Port is at 0x296h.

Remember that this access is from the host CPU I/O address range. To conserve space in the crowded CPU I/O addresses, many of the hardware monitor registers are “banked” with the bank number located at Bank0, index 04Eh.

9.1 Address Port (Port x5h)

Attribute: Bit 6:0 Read/Write , Bit 7: Reserved

Size: 8 bits

BIT	7	6	5	4	3	2	1	0
NAME	DATA							
DEFAULT	0	0	0	0	0	0	0	0

BIT	DESCRIPTION
7	**RESERVED.**
6-0	**READ/WRITE.**

BIT 7	BIT 6	BIT 5	BIT 4	BIT 3	BIT 2	BIT 1	BIT 0
Reserved (Power On default 0)	Address Pointer (Power On default 00h)						
	A6	A5	A4	A3	A2	A1	A0

9.2 Data Port (Port x6h)

Attribute: Read/Write

Size: 8 bits

BIT	7	6	5	4	3	2	1	0
NAME	DATA							
DEFAULT	0	0	0	0	0	0	0	0

BIT	DESCRIPTION
7-0	Data to be read from or to be written to Value RAM and Register.

9.3 SYSFANOUT PWM Output Frequency Configuration Register – Index 00h (Bank 0)

Attribute: Read/Write

Size: 8 bits

BIT	7	6	5	4	3	2	1	0
NAME	PWM_CLK_SEL1	PWM_SCALE1						
DEFAULT	0	0	0	0	0	1	0	0

The register is meaningful only when SYSFANOUT is progarmmed for PWM output (i.e., Bank0, Index 04h, bit 0 is 0).

BIT	DESCRIPTION
7	**PWM_CLK_SEL1. SYSFANOUT PWM Input Clock Source Select.** This bit selects the clock source for PWM output frequency. Refer the Divisor table.
6-0	**PWM_SCALE1. SYSFANOUT PWM Pre-Scale divider.** The clock source for PWM output is divided by this seven-bit value to calculate the actual PWM output frequency. Refer the Divisor table.

The clock source selected by CKSEL will be divided by the divisor and used as a fan PWM output frequency.

If CKSEL equals **0**, then the output clock is simply equal to **93.9/ (Divisor[6:0]+1) KHz**

MappedDivisor depends on **Divisor[6:0]** and is described in the table below.

Divisor[6:0]	Mapped Divisor	Output Frequency	Divisor[6:0]	Mapped Divisor	Output Frequency
0000000	1	93.9KHz	.....		
0000001	2	46.95KHz			
0000010	3	31.3KHz			
0000011	4	23.47KHz			
0000100	5	18.78KHz	0001111	16	5.86KHz
0000101	6	15.65KHz	0011111	32	2.93KHz
0000110	7	13.41KHz	0111111	64	1.46KHz
0000111	8	11.73KHz	1111111	128	734Hz

If CKSEL equals **1**, then the output clock is simply equal to **1008/ Mapped Divisor Hz**

MappedDivisor depends on **Divisor[3:0]** and is described in the table below.

Divisor[3:0]	Mapped Divisor	Output Frequency	Divisor[3:0]	Mapped Divisor	Output Frequency
0000	1	1008Hz	1000	12	84Hz
0001	2	504Hz	1001	16	63Hz
0010	3	336Hz	1010	32	31.5Hz
0011	4	252Hz	1011	64	15.75Hz
0100	5	201Hz	1100	128	7.875Hz
0101	6	168Hz	1101	256	3.94Hz
0110	7	144Hz	1110	512	1.97Hz
0111	8	126Hz	1111	1024	0.98Hz

9.4 SYSFANOUT Output Value Select Register – Index 01h (Bank 0)

Attribute: Read Only
Size: 8 bits

BIT	7	6	5	4	3	2	1	0
NAME	SYSFANOUT Value							
DEFAULT	7Fh							

FUNCTION MODE		7	6	5	4	3	2	1	0
PWM Output (Bank0, Index 04h, bit 0 is 0)	DESCRIPTION	The PWM duty cycle is equal to this eight-bit value, divided by 255, times 100%. FFh creates a duty cycle of 100%, and 00h creates a duty cycle of 0%.							
DC Voltage Output Bank0, Index 04h, bit 0 is 1)	DESCRIPTION	SYSFANOUT voltage control. The output voltage is calculated according to this equation. **OUTPUT Voltage =** $Vref * \frac{FANOUT}{64}$ Note. VREF is approx 2.048V.						Reserved	
This register could be programmed by Bank1, Index 09									

9.5 CPUFANOUT PWM Output Frequency Configuration Register – Index 02h (Bank 0)

Attribute: Read/Write
Size: 8 bits

BIT	7	6	5	4	3	2	1	0
NAME	PWM_CLK_SEL2	PWM_SCALE2						
DEFAULT	0	0	0	0	0	1	0	0

The register is meaningful only when CPUFANOUT is programmed for PWM output.

BIT	DESCRIPTION
7	**PWM_CLK_SEL2. CPUFANOUT PWM Input Clock Source Select.** This bit selects the clock source for the PWM output. Refer the Divisor table.
6-0	**PWM_SCALE2. CPUFANOUT PWM Pre-Scale divider.** The clock source for PWM output is divided by this seven-bit value to calculate the actual PWM output frequency. Refer the Divisor table.

The clock source selected by CKSEL will be divided by the divisor and used as a fan PWM output frequency.
If CKSEL equals **0**, then the output clock is simply equal to **93.9/ (Divisor[6:0]+1) KHz**
MappedDivisor depends on **Divisor[6:0]** and is described in the table below.

Divisor[6:0]	Mapped Divisor	Output Frequency	Divisor[6:0]	Mapped Divisor	Output Frequency
0000000	1	93.9KHz	.....		
0000001	2	46.95KHz			
0000010	3	31.3KHz			
0000011	4	23.47KHz			
0000100	5	18.78KHz	0001111	16	5.86KHz

Divisor[6:0]	Mapped Divisor	Output Frequency	Divisor[6:0]	Mapped Divisor	Output Frequency
0000101	6	15.65KHz	0011111	32	2.93KHz
0000110	7	13.41KHz	0111111	64	1.46KHz
0000111	8	11.73KHz	1111111	128	734Hz

If CKSEL equals **1**, then the output clock is simply equal to **1008/ Mapped Divisor Hz**
MappedDivisor depends on **Divisor[3:0]** and is described in the table below.

Divisor[3:0]	Mapped Divisor	Output Frequency	Divisor[3:0]	Mapped Divisor	Output Frequency
0000	1	1008Hz	1000	12	84Hz
0001	2	504Hz	1001	16	63Hz
0010	3	336Hz	1010	32	31.5Hz
0011	4	252Hz	1011	64	15.75Hz
0100	5	201Hz	1100	128	7.875Hz
0101	6	168Hz	1101	256	3.94Hz
0110	7	144Hz	1110	512	1.97Hz
0111	8	126Hz	1111	1024	0.98Hz

9.6 CPUFANOUT Output Value Select Register – Index 03h (Bank 0)

Attribute: Read Only
Size: 8 bits

BIT	7	6	5	4	3	2	1	0
NAME	CPUFANOUT Value							
DEFAULT	7Fh							

FUNCTION MODE		7	6	5	4	3	2	1	0
PWM Output	DESCRIPTION	CPUFANOUT PWM Duty. The PWM duty cycle is equal to this 8-bit value, divided by 255, times 100%. FFh creates a duty cycle of 100%, and creates a duty cycle of 0%.							
This register could be programmed by Bank2, Index 09									

9.7 SYSFANOUT Configuration Register I – Index 04h (Bank 0)

Attribute: Read/Write
Size: 8 bits

BIT	7	6	5	4	3	2	1	0
NAME	RESERVED							SYSFANOUT_SEL
DEFAULT	0	0	0	0	0	0	0	1

BIT	DESCRIPTION
7-1	Reserved.
0	**SYSFANOUT Output Mode Selection.** 0: SYSFANOUT pin produces a PWM duty cycle output. 1: SYSFANOUT pin produces DC output. **(Default)**

9.8 Reserved Register – Index 05h ~ 0Fh (Bank 0)

9.9 Reserved Register – Index 10h (Bank 0)

9.10 Reserved Register – Index 11h (Bank 0)

9.11 Reserved Register – Index 12h (Bank 0)

9.12 Reserved Register – Index 13h (Bank 0)

9.13 Reserved Register – Index 14h (Bank 0)

9.14 Reserved Register – Index 15h (Bank 0)

9.15 Reserved Register – Index 16-17h (Bank 0)

9.16 OVT# Configuration Register – Index 18h (Bank 0)

Attribute: Read/Write

Size: 8 bits

BIT	7	6	5	4	3	2	1	0
BIT	RESERVED	DIS_OVT1	RESERVED	OVT1_Mode	RESERVED			STOP
DEFAULT	0	1	0	0	0	0	0	0

BIT	DESCRIPTION
7	**Reserved.**
6	**DIS_OVT1.** 0: Enable SMIOVT1 OVT# output. (Default) 1: Disable temperature sensor SMIOVT1 over-temperature (OVT#) output.
5	**Reserved.**
4	**OVT1_Mode. SMIOVT1 Mode Select.** 0 : Compare Mode. (Default) 1 : Interrupt Mode.
3-1	**Reserved.**
0	**STOP.** **0: Monitor SMIOVT1 temperature source.** **1: Stop monitoring SMIOVT1 temperature source.**

9.17 Reserved Registers – Index 19h ~ 1Fh (Bank 0)

9.18 Value RAM — Index 27h ~ 3Fh (Bank 0)

ADDRESS A6-A0	DESCRIPTION
27h	SMIOVT1 temperature source reading.

ADDRESS A6-A0	DESCRIPTION
2Bh	CPUVCORE High Limit
2Ch	CPUVCORE Low Limit
2Dh	Reserved
2Eh	Reserved
2Fh	AVCC High Limit
30h	AVCC Low Limit
31h	3VCC High Limit
32h	3VCC Low Limit
33h	Reserved
34h	Reserved
35h	Reserved
36h	Reserved
37h	VIN4 High Limit
38h	VIN4 Low Limit
39h	SMIOVT1 temperature sensor High Limit
3Ah	SMIOVT1 temperature sensor Hysteresis Limit

9.19 Configuration Register – Index 40h (Bank 0)

Attribute: Read/Write

Size: 8 bits

BIT	7	6	5	4	3	2	1	0
NAME	INITIALIZATION	RESERVED	EN_WS1	EN_WS	INT_CLEAR	RESERVED	SMI#ENABLE	START
DEFAULT	0	0	0	0	0	0	1	1

BIT	DESCRIPTION
7	**Initialization.** A one restores the power-on default values to some registers. This bit clears itself since the power-on default of this bit is zero.
6	**RESERVED**
5	**Output type of SMIOVT2:** 1: SMI# output type of SMIOVT Source2 temperature (Default: CPUTIN) is Shut-down Interrupt Mode. 0: Depond on the value of Bank0, Index 4C, bit6.
4	**Output type of SMIOVT1** 1: SMI# output type of SMIOVT Source1 temperature (Default: SYSTIN) is Shut-down Interrupt Mode. 0: Depond on the value of Bank0, Index 4C, bit5.
3	**INT_Clear.** A one disables the SMI# output without affecting the contents of Interrupt Status Registers. The device will stop monitoring. It will resume upon clearing of this bit.
2	**Reserved.**
1	**SMI# Enable.** A one enables the SMI# Interrupt output.

BIT	DESCRIPTION
	1: Enable SMI# function (Deafult) 0: Disable SMI# function
0	**Start.** A one enables startup of monitoring operations. A zero puts the part in standby mode. **Note:** Unlike the "INT_Clear" bit, the outputs of interrupt pins will not be cleared if the user writes a zero to this location after an interrupt has occurred.

9.20 Interrupt Status Register 1 – Index 41h (Bank 0)

Attribute: Read Clear

Size: 8 bits

BIT	7	6	5	4	3	2	1	0
NAME	CPUFANIN	SYSFANIN	SOURCE2 _ SMI	SOURCE1 _ SMI	3VCC	AVCC	Reserved	CPUVCORE
DEFAULT	0	0	0	0	0	0	0	0

BIT	DESCRIPTION
7	**CPUFANIN.** A one indicates the fan count limit of CPUFANIN has been exceeded.
6	**SYSFANIN.** A one indicates the fan count limit of SYSFANIN has been exceeded.
5	**SMIOVT2.** A one indicates the high limit of SMIOVT2 temperature has been exceeded. (CPUTIN is default temperature)
4	**SMIOVT1.** A one indicates the high limit of SMIOVT1 temperature has been exceeded. (SYSTIN is default temperature)
3	**3VCC.** A one indicates the high or low limit of 3VCC has been exceeded.
2	**AVCC (Pin 106).** A one indicates the high or low limit of AVCC has been exceeded.
1	**Reserved**
0	**CPUVCORE.** A one indicates the high or low limit of CPUVCORE has been exceeded.

9.21 Interrupt Status Register 2 – Index 42h (Bank 0)

Attribute: Read Clear

Size: 8 bits

BIT	7	6	5	4	3	2	1	0
NAME	Reserved.	Reserved	Reserved	Reserved	Reserved	Reserved	VIN4	Reserved
DEFAULT	0	0	0	0	0	0	0	0

BIT	DESCRIPTION
7-2	**Reserved**
1	**VIN4.** A one indicates the high or low limit of VIN4 has been exceeded.
0	**Reserved**

9.22 SMI# Mask Register 1 – Index 43h (Bank 0)

Attribute: Read/Write

Size: 8 bits

BIT	7	6	5	4	3	2	1	0
NAME	CPUFANIN	SYSFANIN	SMIOVT2	SMIOVT1	3VCC	AVCC	Reserved	CPUVCORE
DEFAULT	1	1	1	1	1	1	1	1

BIT	DESCRIPTION	
7	**CPUFANIN**	A one disables the corresponding interrupt status bit for the $\overline{\text{SMI}}$ interrupt. (See Interrupt Status Register 1 – Index 41h (Bank0))
6	**SYSFANIN**	
5	**SMIOVT2**	
4	**SMIOVT1**	
3	**3VCC**	
2	**AVCC**	
1	**Reserved**	
0	**CPUVCORE**	

9.23 SMI# Mask Register 2 – Index 44h (Bank 0)

Attribute: Read/Write

Size: 8 bits

BIT	7	6	5	4	3	2	1	0
NAME	TAR2	TAR1	Reserved	Reserved	Reserved	VIN4	Reserved	Reserved
DEFAULT	1	1	1	1	1	1	1	1

BIT	DESCRIPTION	
7	**TAR2**	A one disables the corresponding interrupt status bit for the interrupt. (See Interrupt Status Register 2 – Index 42h (*Bank 0*))
6	**TAR1**	
5	**Reserved**	
4	**Reserved**	
3	**Reserved**	
2	**VIN4**	
1	**Reserved**	
0	**Reserved**	

9.24 Interrupt Status Register 4 – Index 45h (Bank 0)

Attribute: Read Clear

Size: 8 bits

BIT	7	6	5	4	3	2	1	0
NAME	Reserved			CPU FANOUT	SYS FANOUT	RESERVED	Shut_ SOURCE2_SMI	Shut_ SOURCE1_SMI
DEFAULT	0	0	0	0	0	0	0	0

BIT	DESCRIPTION
7	**RESERVED**
6	**RESERVED**
5	**Reserved**
4	**CPUFANOUT.** “1” indicates that CPUFANOUT works for three minutes at the full fan speed.
3	**SYSFANOUT.** “1” indicates that SYSFANOUT works for three minutes at the full fan speed.
2	**RESERVED**
1	**Shut_SOURCE2_SMI.** “1” indicates the high limit of SMIOVT _SOURCE2 temperature of SMI# Shut-down mode has been exceeded. (CPUTIN is default temperature)
0	**Shut_SOURCE1_SMI.** “1” indicates the high limit of SMIOVT _SOURCE1 temperature of SMI# Shut-down mode has been exceeded. (SYSTIN is default temperature)

9.25 SMI# Mask Register 3 – Index 46h (Bank 0)

Attribute: Read/Write

Size: 8 bits

BIT	7	6	5	4	3	2	1	0
NAME	Reserved			Shut_CPU	Shut_SYS	Reserved		
DEFAULT	0	0	0	1	1	1	1	0

BIT	DESCRIPTION	
7-6	Reserved	
5	**RESERVED**	“1” disables the corresponding interrupt status bit for the $\overline{\text{SMI}}$ interrupt. (See Interrupt Status Register 4 – Index 45h (Bank 0)).
4	**Shut_SOURCE2_SMI**	
3	**Shut_SOURCE1_SMI**	
2-0	**Reserved**	

9.26 Reserved Register – Index 47h (Bank 0)

9.27 Serial Bus Address Register – Index 48h (Bank 0)

Attribute: Read/Write

Size: 8 bits

BIT	7	6	5	4	3	2	1	0
NAME	RESERVED	SERIAL BUS ADDRESS						
DEFAULT	0	0	1	0	1	1	0	1

BIT	DESCRIPTION
7	**Reserved (Read Only).**

BIT	DESCRIPTION
6-0	**Serial Bus Address <7:1>**

9.28 Reserved Register – Index 49h ~ 4Bh (Bank 0)

9.29 SMI/OVT Control Register1 – Index 4Ch (Bank 0)

Attribute: Read/Write

Size: 8 bits

BIT	7	6	5	4	3	2	1	0
NAME	Reserved	T2ToT6_INT MODE	EN_T1 _ONE	RESERVED	DIS_ OVT2	OVTPOL	RESERVED	
DEFAULT	0	0	0	0	1	0	0	0

BIT	DESCRIPTION
7	**Reserved**
6	**T2ToT6_INTMode.** 1: SMI# output type of Temperature SMIOVT2, SMIOVT3, SMIOVT4, SMIOVT5 and SMIOVT6 temperature source is in Comparator Interrupt mode. 0: SMI# output type of Temperature SMIOVT2, SMIOVT3, SMIOVT4, SMIOVT5 and SMIOVT6 temperature source is in Two-Times Interrupt mode. (Default)
5	**EN_T1_ONE.** 1: SMI# output type of SMIOVT Source1 temperature (Default: SYSTIN) is One-Time Interrupt Mode. 0: SMI# output type is in Two-Times Interrupt Mode. (Default)
4	**RESERVED**
3	**DIS_OVT2.** 1: Disable SMIOVT Source2 temperature sensor (Default: CPUTIN) over-temperature (OVT) output. 0: Enable SMIOVT Source2 temperature OVT output through pin OVT#. (Default)
2	**OVTPOL (Over-temperature polarity).** 1: OVT# is active high. 0: OVT# is active low (Default).
1-0	**Reserved.**

9.30 FAN IN/OUT Control Register – Index 4Dh (Bank 0)

Attribute: Read/Write

Size: 8 bits

BIT	7	6	5	4	3	2	1	0
NAME	Reserved				FANOPV2	FANINC2	FANOPV1	FANINC1
DEFAULT	0	1	0	1	0	1	0	1

BIT	DESCRIPTION
7-4	**Reserved**

BIT	DESCRIPTION
3	**FANOPV2. CPUFANIN output value**, only if bit 2 is set to zero. 1: Pin 61 (CPUFANIN) generates a logic-high signal. 0: Pin 61 generates a logic-low signal. (Default)
2	**FANINC2. CPUFANIN Input Control.** 1: Pin 61 (CPUFANIN) acts as a fan tachometer input. (Default) 0: Pin 61 acts as a fan control signal, and the output value is set by bit 3.
1	**FANOPV1. SYSFANIN output value**, only if bit 0 is set to zero. 1: Pin 63 (SYSFANIN) generates a logic-high signal. 0: Pin 63 generates a logic-low signal. (Default)
0	**FANINC1. SYSFANIN Input Control.** 1: Pin 63 (SYSFANIN) acts as a fan tachometer input. (Default) 0: Pin 63 acts as a fan control signal, and the output value is set by bit 1.

9.31 Bank Select Register – Index 4Eh (Bank 0)

Attribute: Read/Write

Size: 8 bits

BIT	7	6	5	4	3	2	1	0
NAME	HBACS	Reserved.			BANK SEL3	BANK SEL2	BANK SEL1	BANK SEL0
DEFAULT	1	0	0	0	0	0	0	0

BIT	DESCRIPTION	
7	**HBACS. HBACS – High Byte Access.** 1: Access Index 4Fh high-byte register. (Default) 0: Access Index 4Fh low-byte register.	
6	**Reserved.**	
5	**Reserved.**	
4	**Reserved.**	
3	**BANKSEL3.**	Bank Select for Bank0 to Bank7. The Three -bit binary value corresponds to the bank number. For example, "0010" selects bank2.
2	**BANKSEL2.**	
1	**BANKSEL1.**	
0	**BANKSEL0.**	

9.32 Nuvoton Vendor ID Register – Index 4Fh (Bank 0)

Attribute: Read Only

Size: 16 bits

BIT	15	14	13	12	11	10	9	8
NAME	VIDH							
DEFAULT	0	1	0	1	1	1	0	0

BIT	7	6	5	4	3	2	1	0
NAME	VIDL							
DEFAULT	1	0	1	0	0	0	1	1

BIT	DESCRIPTION
15-8	**Vendor ID High-Byte**, if Index 4Eh, bit 7 is 1. Default 5Ch.
7-0	**Vendor ID Low-Byte**, if Index 4Eh, bit 7 is 0. Default A3h.

9.33 Reserved Register – Index 50h (Bank 0)

Attribute: Read/Write
Size: 8 bits

BIT	7	6	5	4	3	2	1	0
NAME	Reserved							
DEFAULT	0	0	0	0	0	0	0	1

BIT	DESCRIPTION
7-0	**Reserved**

9.34 Reserved Register – Index 51h ~ 57h (Bank 0)

9.35 Chip ID – Index 58h (Bank 0)

Attribute: Read Only
Size: 8 bits

BIT	7	6	5	4	3	2	1	0
NAME	CHIPID							
DEFAULT	1	1	0	0	0	0	0	1

BIT	DESCRIPTION
7-0	Nuvoton Chip ID number. Default C1h.

9.36 Reserved Register – Index 59h ~ 5Ch (Bank 0)

9.37 VBAT Monitor Control Register – Index 5Dh (Bank 0)

Attribute: Read/Write
Size: 8 bits

BIT	7	6	5	4	3	2	1	0
NAME	Reserved	DIODES6	DIODES5	DIODES4	DIODES3	DIODES2	DIODES1	EN_ VBAT _MNT
DEFAULT	0	0	0	0	0	1	0	0

BIT	DESCRIPTION
7	**Reserved**
6	**DIODES 6. Sensor type selection for VTIN0.** 1: Diode sensor. 0: Thermistor sensor. (default)
5	**DIODES 5. Sensor type selection for AUXTIN2.** 1: Diode sensor. 0: Thermistor sensor. (default)
4	**DIODES 4. Sensor type selection for AUXTIN1.** 1: Diode sensor. 0: Thermistor sensor. (default)
3	**DIODES 3. Sensor type selection for AUXTIN0.** 1: Diode sensor. 0: Thermistor sensor. (default)
2	**DIODES 2. Sensor type selection for CPUTIN.** 1: Diode sensor. (default) 0: Thermistor sensor.
1	**DIODES 1. Sensor type selection for SYSTIN.** 1: Diode sensor. 0: Thermistor sensor. (default)
0	**EN_VBAT_MNT.** 1: Enable battery voltage monitor. When this bit changes from zero to one, it takes one monitor cycle time to update the VBAT reading value register. 0: Disable battery voltage monitor.

9.38 Current Mode Enable Register – Index 5Eh (Bank 0)

Attribute: Read/Write

Size: 8 bits

BIT	7	6	5	4	3	2	1	0
NAME	Reserved	EN_ VTIN0 CURRENT MODE	EN_ AUXTIN2 CURRENT MODE	EN_ AUXTIN1 CURRENT MODE	EN_ AUXTIN0 CURRENT MODE	EN_ CPUTIN CURRENT MODE	EN_ SYSTIN CURRENT MODE	Reserved
DEFAULT	0	0	0	0	0	1	0	0

BIT	DESCRIPTION
7-4	**Reserved**
3	**Enable AUXTIN0 Current Mode**. With AUXTIN0 is selected to Diode sensor (Bank0, Index 5Dh, Bit 3 = 1). 1: Temperature sensing of AUXTIN0 by Current Mode. 0: Temperature sensing of AUXTIN0 depends on the setting of Index 5Dh. **(Default)**
2	**Enable CPUTIN Current Mode.** With CPUTIN is selected to Diode sensor (Bank0, Index 5Dh, Bit 2 = 1). 1: Temperature sensing of CPUTIN by Current mode. **(Default)** 0: Temperature sensing of CPUTIN depends on the setting of Index 5Dh.

BIT	DESCRIPTION
1-0	**Reserved.**

9.39 Reserved Register – Index 5F (Bank 0)

9.40 Reserved Register – Index 60 (Bank 0)

9.41 Reserved Register – Index 61F ~ 72F (Bank 0)

9.42 MONITOR TEMPERATURE 1 Register (Integer Value)- Index 73h (Bank 0)

Attribute: Read Only

Size: 8 bits

BIT	7	6	5	4	3	2	1	0
NAME	MONITOR TEMPERATURE 1 [8:1]							
DEFAULT	0	0	0	0	0	0	0	0

BIT	DESCRIPTION
7-0	**MONITOR TEMPERATURE 1 [8:1]** SYSFANOUT fan control temperature reading. (Source is selected by Bank1, Index00 bit[4:0])

9.43 MONITOR TEMPERATURE 1 Register (Fractional Value)- Index 74h (Bank 0)

Attribute: Read Only

Size: 8 bits

BIT	7	6	5	4	3	2	1	0
NAME	MONITOR TEMPERATURE 1 [0]	Reserved						
DEFAULT	0	0	0	0	0	0	0	0

BIT	DESCRIPTION
7	**MONITOR TEMPERATURE 1 [0]** SYSFANOUT fan control temperature reading. (Source is selected by Bank1, Index00 bit[4:0])
6-0	**Reserved**

9.44 MONITOR TEMPERATURE 2 Register (Integer Value)- Index 75h (Bank 0)

Attribute: Read Only

Size: 8 bits

BIT	7	6	5	4	3	2	1	0
NAME	MONITOR TEMPERATURE 2 [8:1]							

DEFAULT	0	0	0	0	0	0	0	0

BIT	DESCRIPTION
7-0	**MONITOR TEMPERATURE 2 [8:1]** CPUFANOUT fan control temperature reading. (Source is selected by Bank2, Index00 bit[4:0])

9.45 MONITOR TEMPERATURE 2 Register (Fractional Value)- Index 76h (Bank 0)

Attribute: Read Only

Size: 8 bits

BIT	7	6	5	4	3	2	1	0
NAME	MONITOR TEMPERATURE 2 [0]	Reserved						
DEFAULT	0	0	0	0	0	0	0	0

BIT	DESCRIPTION
7	**MONITOR TEMPERATURE 2 [0]** CPUFANOUT fan control temperature reading. (Source is selected by Bank2, Index00 bit[4:0])
6-0	**Reserved**

9.46 Reserved Register - Index 77h (Bank 0)

9.47 Reserved Register - Index 78h (Bank 0)

9.48 Reserved Register - Index 79h (Bank 0)

9.49 Reserved Register - Index 7Ah (Bank 0)

9.50 Reserved Register - Index 7Ch (Bank 0)

9.51 Reserved Register – Index 7Dh~ADh (Bank 0)

9.52 PECI Temperature Reading Enable for SMIOVT and SMART FAN Control Register – Index AEh (Bank 0)

Attribute: Read/Write

Size: 8 bits

BIT	7	6	5	4	3	2	1	0
NAME	Reserved						EN_PECI1	EN_PECI0
DEFAULT	0	0	0	0	0	0	0	0

BIT	DESCRIPTION
7-2	**Reserved.**
1	**Enable PECI Agent1**
0	**Enable PECI Agent0**

Note. If the temperature source is selecting to PECI, please set Bank0 Index AEh first for reading correct value.

9.53 BEEP Control Register 1 – Index B2h (Bank0)

Attribute: Read/Write

Size: 8 bits

BIT	7	6	5	4	3	2	1	0
NAME	En3VSB_BP	EnVIN4_BP	Reserved	Reserved	En3VCC_BP	EnAVCC_BP	Reserved	EnCPUVCORE_BP
DEFAULT	0	0	0	0	0	0	0	0

BIT	DESCRIPTION
7	**En3VSB_BP** **1 : Enable 3VSB Beep function** **0 : Disable 3VSB Beep fuction**
6	**EnVIN4_BP** **1 : Enable VIN4 Beep function** **0 : Disable VIN4 Beep fuction**
5	**Reserved**
4	**Reserved**
3	**En3VCC_BP** **1 : Enable 3VCC Beep function** **0 : Disable 3VCC Beep fuction**
2	**EnAVCC_BP** **1 : Enable AVCC Beep function** **0 : Disable AVCC Beep fuction**
1	**Reserved**
0	**EnCPUVCORE_BP** **1 : Enable CPUVCORE Beep function** **0 : Disable CPUVCORE Beep fuction**

9.54 BEEP Control Register 2 – Index B3h (Bank0)

Attribute: Read/Write

Size: 8 bits

BIT	7	6	5	4	3	2	1	0
NAME	User Mode	Reserved	EnVIN3_BP	EnVIN2_BP	Reserved	Reserved	EnVTT_BP	EnVBAT_BP
DEFAULT	0	0	0	0	0	0	0	0

BIT	DESCRIPTION
7	**User control for Beep alarm** **1 : Enable** **0 : Disable**
6	**Reserved**
5	**EnVIN3_BP** **1 : Enable VIN3 Beep function** **0 : Disable VIN3 Beep fuction**
4	**EnVIN2_BP** **1 : Enable VIN2 Beep function** **0 : Disable VIN2 Beep fuction**
3	**Reserved**
2	**Reserved**
1	**EnVTT_BP** **1 : Enable VTT Beep function** **0 : Disable VTT Beep fuction**
0	**EnVBAT_BP** **1 : Enable VBAT Beep function** **0 : Disable VBAT Beep fuction**

Note: For each beep alarm event, please set “Bank0, Index B5, bit0” to 1.

9.55 BEEP Control Register 3 – Index B4h (Bank0)

Attribute: Read/Write

Size: 8 bits

BIT	7	6	5	4	3	2	1	0
NAME	RESERVED	RESERVED	RESERVED	RESERVED	RESERVED	RESERVED	EnT2 _BP	EnT1 _BP
DEFAULT	0	0	0	0	0	0	0	0

BIT	DESCRIPTION
7-2	**Reserved**
0	**EnT2_BP** **1 : Enable SMIOVT2 Beep function** **0 : Disable SMIOVT2 Beep fuction**
0	**EnT1_BP** **1 : Enable SMIOVT1 Beep function** **0 : Disable SMIOVT1 Beep fuction**

Note: For each beep alarm event, please set “Bank0, Index B5, bit0” to 1.

9.56 BEEP Control Register 4 – Index B5h (Bank0)

Attribute: Read/Write

Size: 8 bits

BIT	7	6	5	4	3	2	1	0

NAME	Reserved					En CPUFANIN _BP	En SYSFANIN _BP	En_Beep
DEFAULT	0	0	0	0	0	0	0	0

BIT	DESCRIPTION
7-3	**Reserved**
2	**En CPUFANIN _BP** **1 : Enable CPUFANIN Beep function** **0 : Disable CPUFANIN Beep fuction**
1	**En SYSFANIN _BP** **1 : Enable SYSFANIN Beep function** **0 : Disable SYSFANIN Beep fuction**
0	**Enable Beep Function:** **1 : Enable Beep Function** **0 : Disable Beep Fuction**

Note: For each beep alarm event, please set “Bank0, Index B5, bit0” to 1.

9.57 SYSFAN Monitor Temperature Source Select Register/ STOPDUTY Enable Register – Index 00h (Bank 1)

Attribute: Read/Write

Size: 8 bits

BIT	7	6	5	4	3	2	1	0
NAME	Stopduty_En	Reserved		SYSFAN SOURCE[4:0]				
DEFAULT	0	0	0	0	0	0	0	1

BIT	DESCRIPTION
7	**Stopduty_En:** 0: FANOUT will decrease to zero value at most if necessary. 1: FANOUT will decrease to SYSFANOUT Stop Value (Bank1, index05h) at most if necessary. (This function is for Thermal Cruise mode.)
6-5	**Reserved**
4-0	**SYSFAN Temperature Source Select**: **Bits** **4 3 2 1 0** 0 0 0 0 1: Select **SYSTIN** as SYSFAN monitoring source. (Default) 0 0 0 1 0: Select **CPUTIN** as SYSFAN monitoring source. 0 0 0 1 1: Select **AUXTIN0** as SYSFAN monitoring source. 0 0 1 0 0: Select **AUXTIN1** as SYSFAN monitoring source. 0 0 1 0 1: Select **AUXTIN2** as SYSFAN monitoring source. 0 0 1 1 0: Select **VTIN0** as SYSFAN monitoring source. 0 0 1 1 1: Reserved. 0 1 0 0 0: Select **SMBUSMASTER 0** as SYSFAN monitoring source.

BIT	DESCRIPTION
	0 1 0 0 1: Select **SMBUSMASTER 1** as SYSFAN monitoring source. 0 1 0 1 0: Select **SMBUSMASTER 2** as SYSFAN monitoring source. 0 1 0 1 1: Select **SMBUSMASTER 3** as SYSFAN monitoring source. 0 1 1 0 0: Select **SMBUSMASTER 4** as SYSFAN monitoring source. 0 1 1 0 1: Select **SMBUSMASTER 5** as SYSFAN monitoring source. 0 1 1 1 0: Select **SMBUSMASTER 6** as SYSFAN monitoring source. 0 1 1 1 1: Select **SMBUSMASTER 7** as SYSFAN monitoring source. 1 0 0 0 0: Select **PECI Agent 0** as SYSFAN monitoring source. 1 0 0 0 1: Select **PECI Agent 1** as SYSFAN monitoring source. 1 0 0 1 0: Select **PCH_CHIP_CPU_MAX_TEMP** as SYSFAN monitoring source. 1 0 0 1 1: Select **PCH_CHIP_TEMP** as SYSFAN monitoring source. 1 0 1 0 0: Select **PCH_CPU_TEMP** as SYSFAN monitoring source. 1 0 1 0 1: Select **PCH_MCH_TEMP** as SYSFAN monitoring source. 1 0 1 1 0: Select **PCH_DIM0_TEMP** as SYSFAN monitoring source. 1 0 1 1 1: Select **PCH_DIM1_TEMP** as SYSFAN monitoring source. 1 1 0 0 0: Select **PCH_DIM2_TEMP** as SYSFAN monitoring source. 1 1 0 0 1: Select **PCH_DIM3_TEMP** as SYSFAN monitoring source. 1 1 0 1 0: Select **BYTE_TEMP** as SYSFAN monitoring source.

Note. If the temperature source is selecting to PECI, please set Bank0 Index AEh first for reading correct value.

9.58 SYSFAN Target Temperature Register / SYSFANIN Target Speed_L Register – Index 01h (Bank 1)

Attribute: Read/Write

Size: 8 bits

BIT	7	6	5	4	3	2	1	0
NAME	SYSTIN Target Temperature / SYSFANIN Target Speed_L							
DEFAULT	0	0	0	0	0	0	0	0

FUNCTION MODE		7	6	5	4	3	2	1	0
Thermal Cruise™	DESCRIPTION	SYSFAN Target Temperature							
Fan Speed Cruise™	DESCRIPTION	SYSFANIN Target Speed [7:0], [11:8] associate index 0C [3:0]							

9.59 SYSFAN MODE Register / SYSFAN TOLERRANCE Register – Index 02h (Bank 1)

Attribute: Read/Write

Size: 8 bits

BIT	7	6	5	4	3	2	1	0
NAME	SYSFAN MODE				Reserved	Tolerance of SYSFAN Target Temperature or SYSFANIN Target Speed_L		
DEFAULT	0	0	0	0	0	0	0	0

BIT	DESCRIPTION

7-4	**SYSFANOUT Mode Select.** 0000: SYSFANOUT is in Manual Mode. **(Default)** 0001: SYSFANOUT is in Thermal Cruise Mode. 0010: SYSFANOUT is in Speed Cruise Mode. 0100: SYSFANOUT is in SMART FAN IV Mode.
3	**Reserved**
2-0	Tolerance of SYSFAN Target Temperature or SYSFANIN Target Speed_L.

9.60 SYSFANOUT Step Up Time Register – Index 03h (Bank 1)

Attribute: Read/Write

Size: 8 bits

BIT	7	6	5	4	3	2	1	0
NAME	SYSFANOUT Value Step Up Time							
DEFAULT	0	0	0	0	1	0	1	0

In SMART FAN™ mode, this register determines the amount of time SYSFANOUT takes to increase its value by one step.

(1) For PWM output:

The units are intervals of 0.1 second. The default time is 1 second.

(2) For DC output:

The units are intervals of 0.4 second. The default time is 4 seconds.

9.61 SYSFANOUT Step Down Time Register – Index 04h (Bank 1)

Attribute: Read/Write

Size: 8 bits

BIT	7	6	5	4	3	2	1	0
NAME	SYSFANOUT Value Step Down Time							
DEFAULT	0	0	0	0	1	0	1	0

In SMART FAN™ mode, this register determines the amount of time SYSFANOUT takes to decrease its value by one step.

(1) For PWM output:

The units are intervals of 0.1 second. The default time is 1 second.

(2) For DC output:

The units are intervals of 0.4 second. The default time is 4 seconds.

9.62 SYSFANOUT Stop Value Register – Index 05h (Bank 1)

Attribute: Read/Write

Size: 8 bits

BIT	7	6	5	4	3	2	1	0
NAME	SYSFANOUT Stop Value							
DEFAULT	0	0	0	0	0	0	0	1

In Thermal Cruise mode, the SYSFANOUT value decreases to this eight-bit value if the temperature stays below the lowest temperature limit. This value should not be zero.

Please note that Stop Value does not mean that the fan really stops. It means that if the temperature keeps below low temperature limit, then the fan speed keeps on decreasing until reaching a minimum value, and this is Stop Value.

9.63 SYSFANOUT Start-up Value Register – Index 06h (Bank 1)

Attribute: Read/Write

Size: 8 bits

BIT	7	6	5	4	3	2	1	0
NAME	SYSFANOUT Start-Up Value							
DEFAULT	0	0	0	0	0	0	0	1

In Thermal Cruise mode, SYSFANOUT value increases from zero to this eight-bit register value to provide a minimum value to turn on the fan. This value should not be zero.

9.64 SYSFANOUT Stop Time Register – Index 07h (Bank 1)

Attribute: Read/Write

Size: 8 bits

BIT	7	6	5	4	3	2	1	0
NAME	SYSFANOUT Value Stop Time							
DEFAULT	0	0	1	1	1	1	0	0

In Thermal Cruise mode, this register determines the amount of time it takes SYSFANOUT value to fall from the stop value to zero.

(1) For PWM output:

The units are intervals of 0.1 second. The default time is 1 second.

(2) For DC output:

The units are intervals of 0.4 second. The default time is 4 seconds.

9.65 Reserved Register – Index 08h (Bank 1)

9.66 SYSFANOUT Output Value Select Register – Index 09h (Bank 1)

Attribute: Read/Write

Size: 8 bits

BIT	7	6	5	4	3	2	1	0
NAME	SYSFANOUT Value							
DEFAULT	0	1	1	1	1	1	1	1

The default speed of fan output is specified in registers CR[E0h] to CR[E4h] of Logical Device B, CR[E0h] is the Default Speed Configuration Register of SYSFANOUT.

FUNCTION MODE		7	6	5	4	3	2	1	0
PWM Output (Bank0, Index 04h, bit 0 is 0)	**DESCRIPTION**	The PWM duty cycle is equal to this eight-bit value, divided by 255, times 100%. FFh creates a duty cycle of 100%, and 00h creates a duty cycle of 0%.							
DC Voltage Output Bank0, Index 04h, bit 0 is 1)	**DESCRIPTION**	SYSFANOUT voltage control. The output voltage is calculated according to this equation. **OUTPUT Voltage =** $Vref * \frac{FANOUT}{64}$ Note. VREF is approx 2.048V.						Reserved	

9.67 Reserved Register – Index 0Ah~0Bh (Bank 1)

9.68 SYSFANIN Tolerance_H / Target Speed_H Register – Index 0Ch (Bank 1)

Attribute: Read/Write

Size: 8 bits

BIT	7	6	5	4	3	2	1	0
NAME	Reserved	SYSFANIN TOL_H			SYSFANIN Target Speed_H			
DEFAULT	0	0			0			

BIT	DESCRIPTION
7	**Reserved**
6-4	SYSFANIN Tolerance_H [5:3]
3-0	SYSFANIN Target Speed_H [11:8]

9.69 Reserved Register – Index 0Dh~1Fh (Bank 1)

9.70 SMART FAN IV SYSFANOUT STEP Register – Index 20h (Bank 1)

Attribute: Read/Write

Size: 8 bits

BIT	7	6	5	4	3	2	1	0
NAME	Reserved							En_SYSFANOUT_STEP
DEFAULT	0	0	0	0	0	0	0	0

BIT	DESCRIPTION
7-1	**Reserved**
0	**En_SYSFANOUT_STEP** 0: Disable SMART FAN IV has Stepping SYSFANOUT. (default) 1: Enable SMART FAN IV has Stepping SYSFANOUT.

9.71 SYSFAN (SMART FAN™ IV) Temperature 1 Register(T1) – Index 21h (Bank 1)

Attribute: Read/Write
Size: 8 bits

BIT	7	6	5	4	3	2	1	0
NAME	SYSFAN (SMART FAN™ IV) Temperature 1							
DEFAULT	0	0	0	1	1	0	0	1

BIT	DESCRIPTION
7-0	SYSFAN (SMART FAN™ IV) Temperature 1 Register (T1).

9.72 SYSFAN (SMART FAN™ IV) Temperature 2 Register(T2) – Index 22h (Bank 1)

Attribute: Read/Write
Size: 8 bits

BIT	7	6	5	4	3	2	1	0
NAME	SYSFAN (SMART FAN™ IV) Temperature 2							
DEFAULT	0	0	1	0	0	0	1	1

BIT	DESCRIPTION
7-0	SYSFAN (SMART FAN™ IV) Temperature 2 Register (T2).

9.73 SYSFAN (SMART FAN™ IV) Temperature 3 Register(T3) – Index 23h (Bank 1)

Attribute: Read/Write
Size: 8 bits

BIT	7	6	5	4	3	2	1	0
NAME	SYSFAN (SMART FAN™ IV) Temperature 3							
DEFAULT	0	0	1	0	1	1	0	1

BIT	DESCRIPTION
7-0	SYSFAN (SMART FAN™ IV) Temperature 3 Register (T3).

9.74 SYSFAN (SMART FAN™ IV) Temperature 4 Register(T4) – Index 24h (Bank 1)

Attribute: Read/Write
Size: 8 bits

BIT	7	6	5	4	3	2	1	0
NAME	SYSFAN (SMART FAN™ IV) Temperature 4							
DEFAULT	0	0	1	1	0	1	1	1

BIT	DESCRIPTION
7-0	SYSFAN (SMART FAN™ IV) Temperature 4 Register (T4).

9.75 Reserved Register – Index 25h~26h (Bank 1)

9.76 SYSFAN (SMART FAN™ IV) DC/PWM 1 Register – Index 27h (Bank 1)

Attribute: Read/Write

Size: 8 bits

BIT	7	6	5	4	3	2	1	0
NAME	SYSFAN (SMART FAN™ IV) DC/PWM 1							
DEFAULT	1	0	0	0	1	1	0	0

BIT	DESCRIPTION
7-0	SYSFAN (SMART FAN™ IV) DC/PWM 1 Register.

9.77 SYSFAN (SMART FAN™ IV) DC/PWM 2 Register – Index 28h (Bank 1)

Attribute: Read/Write

Size: 8 bits

BIT	7	6	5	4	3	2	1	0
NAME	SYSFAN (SMART FAN™ IV) DC/PWM 2							
DEFAULT	1	0	1	0	1	0	1	0

BIT	DESCRIPTION
7-0	SYSFAN (SMART FAN™ IV) DC/PWM 2 Register.

9.78 SYSFAN (SMART FAN™ IV) DC/PWM 3 Register – Index 29h (Bank 1)

Attribute: Read/Write

Size: 8 bits

BIT	7	6	5	4	3	2	1	0
NAME	SYSFAN (SMART FAN™ IV) DC/PWM 3							
DEFAULT	1	1	0	0	1	0	0	0

BIT	DESCRIPTION
7-0	SYSFAN (SMART FAN™ IV) DC/PWM 3 Register.

9.79 SYSFAN (SMART FAN™ IV) DC/PWM 4 Register – Index 2Ah (Bank 1)

Attribute: Read/Write

Size: 8 bits

BIT	7	6	5	4	3	2	1	0
NAME	SYSFAN (SMART FAN™ IV) DC/PWM 4							
DEFAULT	1	1	1	0	0	1	1	0

BIT	DESCRIPTION
7-0	SYSFAN (SMART FAN™ IV) DC/PWM 4 Register.

9.80 Reserved Register – Index 2Bh~30h (Bank 1)

9.81 SYSFAN 3-Wire Enable Register – Index 31h (Bank 1)

Attribute: Read/Write

Size: 8 bits

BIT	7	6	5	4	3	2	1	0
NAME	Reserved							EN_SYS_3WFAN
DEFAULT	0							0

BIT	DESCRIPTION
7-1	**Reserved**
0	**EN_SYS_3WFAN (SYSFAN type setting)** 0: 4-wire fan 1: 3-wire fan

9.82 Reserved Register – Index 32h~34h(Bank 1)

9.83 SYSFAN (SMART FAN™ IV) Critical Temperature Register – Index 35h (Bank 1)

Attribute: Read/Write

Size: 8 bits

BIT	7	6	5	4	3	2	1	0
NAME	SYSFAN (SMART FAN™ IV) Temperature Critical							
DEFAULT	0	0	1	1	1	1	0	0

BIT	DESCRIPTION
7-0	SYSFAN (SMART FAN™ IV) Critical Temperature Register.

9.84 SYSFAN Enable Critical Duty – Index 36h (Bank 1)

Attribute: Read/Write

Size: 8 bits

BIT	7	6	5	4	3	2	1	0
NAME	Reserved							En_SYS_CRITICAL_DUTY
DEFAULT	0							0

BIT	DESCRIPTION
7-1	**Reserved**

0	**En_SYS_CRITICAL_DUTY** 0: Load default Full Speed 8'hFF for SYSFANOUT. 1: Used Index 37 CRITICAL_DUTY Value for SYSFANOUT.

9.85 SYSFAN Critical Duty Register – Index 37h (Bank 1)

Attribute: Read/Write
Size: 8 bits

BIT	7	6	5	4	3	2	1	0
NAME	SYSFAN Critical Duty							
DEFAULT	CC							

BIT	DESCRIPTION
7-0	SYSFAN Critical Duty.

9.86 SYSFANOUT Critical Temperature Tolerance Register – Index 38h (Bank 1)

Attribute: Read/Write
Size: 8 bits

BIT	7	6	5	4	3	2	1	0
NAME	Reserved					SYSFANOUT Critical Temperature Tolerance		
DEFAULT	0					0	0	0

BIT	DESCRIPTION
7-3	**Reserved**
2-0	SYSFANOUT Critical Temperature Tolerance

9.87 Weight value Configuration Register – Index 39h (Bank 1)

Attribute: Read/Write
Size: 8 bits

BIT	7	6	5	4	3	2	1	0
NAME	EN_SYSFAN_WEIGHT	Reserved		SYS_WEIGHT_SEL				
DEFAULT	0	0		0	0	0	0	1

BIT	DESCRIPTION
7	**EN_SYSFAN_WEIGHT.** 0: Disable Weight Value Control for SYSFAN. 1: Enable Weight Value Control for SYSFAN.
6-5	**Reserved**
4-0	**SYSFAN Weighting Temperature Source Select**: **Bits** **4 3 2 1 0** 0 0 0 0 1: Select **SYSTIN** as SYSFAN monitoring source. (Default)

BIT	DESCRIPTION
	0 0 0 1 0: Select **CPUTIN** as SYSFAN monitoring source. 0 0 0 1 1: Select **AUXTIN0** as SYSFAN monitoring source. 0 0 1 0 0: Select **AUXTIN1** as SYSFAN monitoring source. 0 0 1 0 1: Select **AUXTIN2** as SYSFAN monitoring source. 0 0 1 1 0: Select **VTIN0** as SYSFAN monitoring source. 0 0 1 1 1: Reserved. 0 1 0 0 0: Select **SMBUSMASTER 0** as SYSFAN monitoring source. 0 1 0 0 1: Select **SMBUSMASTER 1** as SYSFAN monitoring source. 0 1 0 1 0: Select **SMBUSMASTER 2** as SYSFAN monitoring source. 0 1 0 1 1: Select **SMBUSMASTER 3** as SYSFAN monitoring source. 0 1 1 0 0: Select **SMBUSMASTER 4** as SYSFAN monitoring source. 0 1 1 0 1: Select **SMBUSMASTER 5** as SYSFAN monitoring source. 0 1 1 1 0: Select **SMBUSMASTER 6** as SYSFAN monitoring source. 0 1 1 1 1: Select **SMBUSMASTER 7** as SYSFAN monitoring source. 1 0 0 0 0: Select **PECI Agent 0** as SYSFAN monitoring source. 1 0 0 0 1: Select **PECI Agent 1** as SYSFAN monitoring source. 1 0 0 1 0: Select **PCH_CHIP_CPU_MAX_TEMP** as SYSFAN monitoring source. 1 0 0 1 1: Select **PCH_CHIP_TEMP** as SYSFAN monitoring source. 1 0 1 0 0: Select **PCH_CPU_TEMP** as SYSFAN monitoring source. 1 0 1 0 1: Select **PCH_MCH_TEMP** as SYSFAN monitoring source. 1 0 1 1 0: Select **PCH_DIM0_TEMP** as SYSFAN monitoring source. 1 0 1 1 1: Select **PCH_DIM1_TEMP** as SYSFAN monitoring source. 1 1 0 0 0: Select **PCH_DIM2_TEMP** as SYSFAN monitoring source. 1 1 0 0 1: Select **PCH_DIM3_TEMP** as SYSFAN monitoring source. 1 1 0 1 0: Select **BYTE_TEMP** as SYSFAN monitoring source.

9.88 SYSFANOUT Temperature Step Register – Index 3Ah (Bank 1)

Attribute: Read/Write

Size: 8 bits

BIT	7	6	5	4	3	2	1	0
NAME	SYSFANOUT Temperature Step (SYS_TEMP_STEP)							
DEFAULT	0							

BIT	DESCRIPTION
7-0	**SYSFANOUT Temperature Step**

9.89 SYSFANOUT Temperature Step Tolerance Register – Index 3Bh (Bank 1)

Attribute: Read/Write

Size: 8 bits

BIT	7	6	5	4	3	2	1	0
NAME	SYSFANOUT Temperature Step Tolerance (SYS_TEMP_STEP_TOL)							
DEFAULT	0							

BIT	DESCRIPTION
7-0	**SYSFANOUT Temperature Step Tolerance**

9.90 SYSFANOUT Weight Step Register – Index 3Ch (Bank 1)

Attribute: Read/Write

Size: 8 bits

BIT	7	6	5	4	3	2	1	0
NAME	SYSFANOUT Weight Step (SYS_WEIGHT_STEP)							
DEFAULT	0							

BIT	DESCRIPTION
7-0	**SYSFANOUT Weight Step**

9.91 SYSFANOUT Temperature Base Register – Index 3Dh (Bank 1)

Attribute: Read/Write

Size: 8 bits

BIT	7	6	5	4	3	2	1	0
NAME	SYSFANOUT Temperature Base (SYS_TEMP_BASE)							
DEFAULT	0							

BIT	DESCRIPTION
7-0	**SYSFANOUT Temperature Base**

9.92 SYSFANOUT Temperature Fan Duty Base Register – index 3Eh (Bank 1)

Attribute: Read/Write

Size: 8 bits

BIT	7	6	5	4	3	2	1	0
NAME	SYSFANOUT Temperature Base (SYS_FC_BASE)							
DEFAULT	0							

BIT	DESCRIPTION
7-0	**SYSFANOUT Start point of Fan Duty increasing**

9.93 SYSFAN PECIERR DUTY Enable Register – Index 3Fh (Bank 1)

Attribute: Read/Write

Size: 8 bits

BIT	7	6	5	4	3	2	1	0
NAME	Reserved						EN_SYS_PECIERR_DUTY	
DEFAULT	0						0	0

BIT	DESCRIPTION
7-2	**Reserved**
1-0	**EN_SYS_PECIERR_DUTY** 00: Disable PECIERR DUTY FANOUT (default) 01: Enable PECIERR DUTY FANOUT, Used Index 41 **PECI_ERR_SYSOUT** Value for SYSFANOUT. 10,11: Keep Full Speed

9.94 Reserved Register – Index 40h (Bank 1)

9.95 SYSFANOUT Pre-Configured Register For PECI Error – Index 41h (Bank 1)

Attribute: Read/Write

Size: 8 bits

BIT	7	6	5	4	3	2	1	0
NAME	SYSFANOUT pre-configured register for PECI error (PECI_ERR_SYSOUT)							
DEFAULT	1	1	1	1	1	1	1	1

BIT	DESCRIPTION
7-0	**SYSFANOUT pre-configured register for PECI error.**

9.96 Reserved Register – Index 42h ~ 4Fh (Bank 1)

9.97 SMIOVT2 Temperature Source (High Byte) Register – Index 50h (Bank 1)

Attribute: Read Only

Size: 8 bits

BIT	7	6	5	4	3	2	1	0
NAME	TEMP<8:1>							

BIT	DESCRIPTION
7-0	**Temperature <8:1> (default: CPUTIN temperature source).** The nine-bit value is in units of 0.5℃.

9.98 SMIOVT2 Temperature Source (Low Byte) Register – Index 51h (Bank 1)

Attribute: Read Only

Size: 8 bits

BIT	7	6	5	4	3	2	1	0
NAME	TEMP<0>	RESERVED						

BIT	DESCRIPTION
7	**Temperature <0> (default: CPUTIN temperature source).** The nine-bit value is in units of 0.5°C.
6-0	**Reserved.**

9.99 SMIOVT2 Temperature Source Configuration Register – Index 52h (Bank 1)

Attribute: Read/Write

Size: 8 bits

BIT	7	6	5	4	3	2	1	0
NAME	RESERVED			FAULT		RESERVED	OVTMOD	STOP
DEFAULT	0	0	0	0	0	0	0	0

BIT	DESCRIPTION
7-5	**Reserved.** This bit should be set to zero.
4-3	**Fault.** Number of faults to detect before setting OVT# output. This avoids false strapping due to noise.
2	**Reserved.** This bit should be set to zero.
1	**OVTMOD. SMIOVT2 Mode Select.** 0 : Compare Mode. (Default) 1: Interrupt Mode.
0	**STOP.** 0: Monitor SMIOVT2 temperature source. 1: Stop monitoring SMIOVT2 temperature source.

9.100 SMIOVT2 Temperature Source Hysteresis (High Byte) Register – Index 53h (Bank 1)

Attribute: Read/Write

Size: 8 bits

BIT	7	6	5	4	3	2	1	0
NAME	THYST<8:1>							
DEFAULT	0	1	0	0	1	0	1	1

BIT	DESCRIPTION
7-0	**THYST<8:1>.** Hysteresis temperature bits 8-1. The nine-bit value is in units of 0.5 C, and the default is 75 C.

9.101 SMIOVT2 Temperature Source Hysteresis (Low Byte) Register – Index 54h (Bank 1)

Attribute: Read/Write

Size: 8 bits

BIT	7	6	5	4	3	2	1	0
NAME	THYST<0>	RESERVED						
DEFAULT	0	0	0	0	0	0	0	0

BIT	DESCRIPTION
7	**THYST<0>. Hysteresis temperature bit 0.** The nine-bit value is in units of 0.5°C.
6-0	**Reserved.**

9.102 SMIOVT2 Temperature Source Over-temperature (High Byte) Register – Index 55h (Bank1)

Attribute: Read/Write

Size: 8 bits

BIT	7	6	5	4	3	2	1	0
NAME	TOVF<8:1>							
DEFAULT	0	1	0	1	0	0	0	0

BIT	DESCRIPTION
7-0	**TOVF<8:1>.** Over-temperature bits 8-1. The nine-bit value is in units of 0.5°C, and the default is 80°C.

9.103 SMIOVT2 Temperature Source Over-temperature (Low Byte) Register – Index 56h (Bank 1)

Attribute: Read/Write

Size: 8 bits

BIT	7	6	5	4	3	2	1	0
NAME	TOVF<0>	RESERVED						
DEFAULT	0	0	0	0	0	0	0	0

BIT	DESCRIPTION
7	**TOVF<0>. Over-temperature bit 0.** The nine-bit value is in units of 0.5°C.
6-0	**Reserved.**

9.104 Reserved Register – Index 57h ~ FFh (Bank 1)

9.105 CPUFAN Monitor Temperature Source Select Register/ STOPDUTY Enable Register – Index 00h (Bank 2)

Attribute: Read/Write

Size: 8 bits

BIT	7	6	5	4	3	2	1	0
NAME	Stopduty_En	Reserved		CPUFAN SOURCE[4:0]				
DEFAULT	0	0	0	0	0	0	1	0

BIT	DESCRIPTION
7	**Stopduty_En:** 0: FANOUT will decrease to zero value at most if necessary. 1: FANOUT will decrease to CPUFANOUT Stop Value (Bank2, index05h) at most if necessary. (This function is for Thermal Cruise mode.)

BIT	DESCRIPTION
6-5	**Reserved**
4-0	**CPUFAN Temperature Source Select**: **Bits** **4 3 2 1 0** 0 0 0 0 1: Select **SYSTIN** as SYSFAN monitoring source. (Default) 0 0 0 1 0: Select **CPUTIN** as SYSFAN monitoring source. 0 0 0 1 1: Select **AUXTIN0** as SYSFAN monitoring source. 0 0 1 0 0: Select **AUXTIN1** as SYSFAN monitoring source. 0 0 1 0 1: Select **AUXTIN2** as SYSFAN monitoring source. 0 0 1 1 0: Select **VTIN0** as SYSFAN monitoring source. 0 0 1 1 1: Reserved. 0 1 0 0 0: Select **SMBUSMASTER 0** as SYSFAN monitoring source. 0 1 0 0 1: Select **SMBUSMASTER 1** as SYSFAN monitoring source. 0 1 0 1 0: Select **SMBUSMASTER 2** as SYSFAN monitoring source. 0 1 0 1 1: Select **SMBUSMASTER 3** as SYSFAN monitoring source. 0 1 1 0 0: Select **SMBUSMASTER 4** as SYSFAN monitoring source. 0 1 1 0 1: Select **SMBUSMASTER 5** as SYSFAN monitoring source. 0 1 1 1 0: Select **SMBUSMASTER 6** as SYSFAN monitoring source. 0 1 1 1 1: Select **SMBUSMASTER 7** as SYSFAN monitoring source. 1 0 0 0 0: Select **PECI Agent 0** as SYSFAN monitoring source. 1 0 0 0 1: Select **PECI Agent 1** as SYSFAN monitoring source. 1 0 0 1 0: Select **PCH_CHIP_CPU_MAX_TEMP** as SYSFAN monitoring source. 1 0 0 1 1: Select **PCH_CHIP_TEMP** as SYSFAN monitoring source. 1 0 1 0 0: Select **PCH_CPU_TEMP** as SYSFAN monitoring source. 1 0 1 0 1: Select **PCH_MCH_TEMP** as SYSFAN monitoring source. 1 0 1 1 0: Select **PCH_DIM0_TEMP** as SYSFAN monitoring source. 1 0 1 1 1: Select **PCH_DIM1_TEMP** as SYSFAN monitoring source. 1 1 0 0 0: Select **PCH_DIM2_TEMP** as SYSFAN monitoring source. 1 1 0 0 1: Select **PCH_DIM3_TEMP** as SYSFAN monitoring source. 1 1 0 1 0: Select **BYTE_TEMP** as SYSFAN monitoring source.

Note. If the temperature source is selecting to PECI, please set Bank0 Index AEh first for reading correct value.

9.106 CPUFAN Target Temperature Register / CPUFANIN Target Speed_L Register – Index 01h (Bank 2)

Attribute: Read/Write

Size: 8 bits

BIT	7	6	5	4	3	2	1	0
NAME	CPUTIN Target Temperature / CPUFANIN Target Speed_L							
DEFAULT	0	0	0	0	0	0	0	0

FUNCTION MODE		7	6	5	4	3	2	1	0
Thermal Cruise™	DESCRIPTION	CPUFAN Target Temperature							
Fan Speed Cruise™	DESCRIPTION	CPUFANIN Target Speed [7:0], [11:8] associate index 0C [3:0]							

9.107 CPUFAN MODE Register / CPUFAN TOLERRANCE Register – Index 02h (Bank 2)

Attribute: Read/Write

Size: 8 bits

BIT	7	6	5	4	3	2	1	0
NAME	CPUFAN MODE				Reserved	Tolerance of CPUFAN Target Temperature or CPUFANIN Target Speed_L		
DEFAULT	0	0	0	0	0	0	1	0

BIT	DESCRIPTION
7-4	**CPUFANOUT Mode Select.** 0000: CPUFANOUT is in Manual Mode. (Default) 0001: CPUFANOUT is in Thermal Cruise Mode. 0010: CPUFANOUT is in Speed Cruise Mode. 0100: CPUFANOUT is in SMART FAN IV Mode.
3	**Reserved**
2-0	Tolerance of CPUFAN Target Temperature or CPUFANIN Target Speed_L.

9.108 CPUFANOUT Step Up Time Register – Index 03h (Bank 2)

Attribute: Read/Write

Size: 8 bits

BIT	7	6	5	4	3	2	1	0
NAME	CPUFANOUT Value Step Up Time							
DEFAULT	0	0	0	0	1	0	1	0

In SMART FAN™ mode, this register determines the amount of time CPUFANOUT takes to increase its value by one step.

(1) For PWM output:

The units are intervals of 0.1 second. The default time is 1 second.

9.109 CPUFANOUT Step Down Time Register – Index 04h (Bank 2)

Attribute: Read/Write

Size: 8 bits

BIT	7	6	5	4	3	2	1	0
NAME	CPUFANOUT Value Step Down Time							
DEFAULT	0	0	0	0	1	0	1	0

In SMART FAN™ mode, this register determines the amount of time CPUFANOUT takes to decrease its value by one step.

(1) For PWM output:

The units are intervals of 0.1 second. The default time is 1 second.

9.110 CPUFANOUT Stop Value Register – Index 05h (Bank 2)

Attribute: Read/Write

Size: 8 bits

BIT	7	6	5	4	3	2	1	0
NAME	CPUFANOUT Stop Value							
DEFAULT	0	0	0	0	0	0	0	1

In Thermal Cruise mode, the CPUFANOUT value decreases to this eight-bit value if the temperature stays below the lowest temperature limit. This value should not be zero.

Please note that Stop Value does not mean that the fan really stops. It means that if the temperature keeps below low temperature limit, then the fan speed keeps on decreasing until reaching a minimum value, and this is Stop Value.

9.111 CPUFANOUT Start-up Value Register – Index 06h (Bank 2)

Attribute: Read/Write

Size: 8 bits

BIT	7	6	5	4	3	2	1	0
NAME	CPUFANOUT Start-Up Value							
DEFAULT	0	0	0	0	0	0	0	1

In Thermal Cruise mode, CPUFANOUT value increases from zero to this eight-bit register value to provide a minimum value to turn on the fan. This value should not be zero.

9.112 CPUFANOUT Stop Time Register – Index 07h (Bank 2)

Attribute: Read/Write

Size: 8 bits

BIT	7	6	5	4	3	2	1	0
NAME	CPUFANOUT Value Stop Time							
DEFAULT	0	0	1	1	1	1	0	0

In Thermal Cruise mode, this register determines the amount of time it takes CPUFANOUT value to fall from the stop value to zero.

(1) For PWM output:

The units are intervals of 0.1 second. The default time is 1 second.

9.113 Reserved Register – Index 08h (Bank 2)

9.114 CPUFANOUT Output Value Select Register – Index 09h (Bank 2)

Attribute: Read/Write

Size: 8 bits

BIT	7	6	5	4	3	2	1	0
NAME	CPUFANOUT Value							

DEFAULT	0	1	1	1	1	1	1	1

The default speed of fan output is specified in registers CR[E0h] to CR[E4h] of Logical Device B, CR[E1h] is the Default Speed Configuration Register of CPUFANOUT.

FUNCTION MODE		7	6	5	4	3	2	1	0
PWM Output Only	DESCRIPTION	The PWM duty cycle is equal to this eight-bit value, divided by 255, times 100%. FFh creates a duty cycle of 100%, and 00h creates a duty cycle of 0%.							

9.115 Reserved Register – Index 0Ah~0Bh (Bank 2)

9.116 CPUFANIN Tolerance_H / Target Speed_H Register – Index 0Ch (Bank 2)

Attribute: Read/Write

Size: 8 bits

BIT	7	6	5	4	3	2	1	0
NAME	Reserved	CPUFANIN TOL_H			CPUFANIN Target Speed_H			
DEFAULT	0	0			0			

BIT	DESCRIPTION
7	**Reserved**
6-4	CPUFANIN Tolerance_H [5:3]
3-0	CPUFANIN Target Speed_H [11:8]

9.117 Reserved Register – Index 0Dh~1Fh (Bank 2)

9.118 SMART FAN IV CPUFANOUT STEP Register – Index 20h (Bank 2)

Attribute: Read/Write

Size: 8 bits

BIT	7	6	5	4	3	2	1	0
NAME	Reserved							En_CPUFANOUT_STEP
DEFAULT	0	0	0	0	0	0	0	0

BIT	DESCRIPTION
7-1	**Reserved**
0	**En_CPUFANOUT_STEP** 0: Disable SMART FAN IV has Stepping CPUFANOUT. (default) 1: Enable SMART FAN IV has Stepping CPUFANOUT.

9.119 CPUFAN (SMART FAN™ IV) Temperature 1 Register(T1) – Index 21h (Bank 2)

Attribute: Read/Write
Size: 8 bits

BIT	7	6	5	4	3	2	1	0
NAME	CPUFAN (SMART FAN™ IV) Temperature 1							
DEFAULT	0	0	1	0	1	0	0	0

BIT	DESCRIPTION
7-0	CPUFAN (SMART FAN™ IV) Temperature 1 Register (T1).

9.120 CPUFAN (SMART FAN™ IV) Temperature 2 Register(T2) – Index 22h (Bank 2)

Attribute: Read/Write
Size: 8 bits

BIT	7	6	5	4	3	2	1	0
NAME	CPUFAN (SMART FAN™ IV) Temperature 2							
DEFAULT	0	0	1	1	0	0	1	0

BIT	DESCRIPTION
7-0	CPUFAN (SMART FAN™ IV) Temperature 2 Register (T2).

9.121 CPUFAN (SMART FAN™ IV) Temperature 3 Register(T3) – Index 23h (Bank 2)

Attribute: Read/Write
Size: 8 bits

BIT	7	6	5	4	3	2	1	0
NAME	CPUFAN (SMART FAN™ IV) Temperature 3							
DEFAULT	0	0	1	1	1	1	0	0

BIT	DESCRIPTION
7-0	CPUFAN (SMART FAN™ IV) Temperature 3 Register (T3).

9.122 CPUFAN (SMART FAN™ IV) Temperature 4 Register(T4) – Index 24h (Bank 2)

Attribute: Read/Write
Size: 8 bits

BIT	7	6	5	4	3	2	1	0
NAME	CPUFAN (SMART FAN™ IV) Temperature 4							
DEFAULT	0	1	0	0	0	1	1	0

BIT	DESCRIPTION
7-0	CPUFAN (SMART FAN™ IV) Temperature 4 Register (T4).

9.123 Reserved Register – Index 25h~26h (Bank 2)

9.124 CPUFAN (SMART FAN™ IV) PWM1 Register – Index 27h (Bank 2)

Attribute: Read/Write

Size: 8 bits

BIT	7	6	5	4	3	2	1	0
NAME	CPUFAN (SMART FAN™ IV) PWM 1							
DEFAULT	1	0	0	0	1	1	0	0

BIT	DESCRIPTION
7-0	CPUFAN (SMART FAN™ IV) PWM1 Register.

9.125 CPUFAN (SMART FAN™ IV) PWM2 Register – Index 28h (Bank 2)

Attribute: Read/Write

Size: 8 bits

BIT	7	6	5	4	3	2	1	0
NAME	CPUFAN (SMART FAN™ IV) PWM 2							
DEFAULT	1	0	1	0	1	0	1	0

BIT	DESCRIPTION
7-0	CPUFAN (SMART FAN™ IV) PWM2 Register.

9.126 CPUFAN (SMART FAN™ IV) PWM3 Register – Index 29h (Bank 2)

Attribute: Read/Write

Size: 8 bits

BIT	7	6	5	4	3	2	1	0
NAME	CPUFAN (SMART FAN™ IV) PWM 3							
DEFAULT	1	1	0	0	1	0	0	0

BIT	DESCRIPTION
7-0	CPUFAN (SMART FAN™ IV) PWM3 Register.

9.127 CPUFAN (SMART FAN™ IV) PWM4 Register – Index 2Ah (Bank 2)

Attribute: Read/Write

Size: 8 bits

BIT	7	6	5	4	3	2	1	0
NAME	CPUFAN (SMART FAN™ IV) PWM4							
DEFAULT	1	1	1	0	0	1	1	0

BIT	DESCRIPTION
7-0	CPUFAN (SMART FAN™ IV) PWM4 Register.

9.128 Reserved Register – Index 2Bh~30h (Bank 2)

9.129 CPUFAN 3-Wire FAN Enable Register – Index 31h (Bank 2)

Attribute: Read/Write

Size: 8 bits

BIT	7	6	5	4	3	2	1	0
NAME	Reserved							EN_CPU_3WFAN
DEFAULT	0							0

BIT	DESCRIPTION
7-1	**Reserved**
0	**EN_CPU_3WFAN (CPUFAN type setting)** 0: 4-wire fan 1: 3-wire fan

9.130 Reserved Register – Index 32h ~ 34h(Bank 2)

9.131 CPUFAN (SMART FAN™ IV) Critical Temperature Register – Index 35h (Bank 2)

Attribute: Read/Write

Size: 8 bits

BIT	7	6	5	4	3	2	1	0
NAME	CPUFAN (SMART FAN™ IV) Temperature Critical							
DEFAULT	0	1	0	0	1	0	1	1

BIT	DESCRIPTION
7-0	CPUFAN (SMART FAN™ IV) Critical Temperature Register.

9.132 CPUFAN Enable Critical Duty – Index 36h (Bank 2)

Attribute: Read/Write

Size: 8 bits

BIT	7	6	5	4	3	2	1	0
NAME	Reserved							En_CPU_CRITICAL_DUTY
DEFAULT	0							0

BIT	DESCRIPTION

7-1	**Reserved**
0	**En_CPU_CRITICAL_DUTY** 0: Load default Full Speed 8'hFF for CPUFANOUT. 1: Used Index 37 CRITICAL_DUTY Value for CPUFANOUT.

9.133 CPUFAN Critical Duty Register – Index 37h (Bank 2)

Attribute: Read/Write

Size: 8 bits

BIT	7	6	5	4	3	2	1	0
NAME	CPUFAN Critical Duty							
DEFAULT	CC							

BIT	DESCRIPTION
7-0	CPUFAN Critical Duty.

9.134 CPUFANOUT Critical Temperature Tolerance Register – Index 38h (Bank 2)

Attribute: Read/Write

Size: 8 bits

BIT	7	6	5	4	3	2	1	0
NAME	Reserved					CPUFANOUT Critical Temperature Tolerance		
DEFAULT	0					0	0	0

BIT	DESCRIPTION
7-3	**Reserved**
2-0	**CPUFANOUT Critical Temperature Tolerance**

9.135 Weight value Configuration Register – Index 39h (Bank 2)

Attribute: Read/Write

Size: 8 bits

BIT	7	6	5	4	3	2	1	0
NAME	EN_CPUFAN_ WEIGHT	Reserved		CPU_WEIGHT_SEL				
DEFAULT	0	0		0	0	0	0	1

BIT	DESCRIPTION
7	**EN_CPUFAN_WEIGHT.** 0: Disable Weight Value Control for CPUFAN. 1: Enable Weight Value Control for CPUFAN.
6-5	**Reserved**
4-0	**CPUFAN Weighting Temperature Source Select**: **Bits**

BIT	DESCRIPTION
	4 3 2 1 0 0 0 0 0 1: Select **SYSTIN** as SYSFAN monitoring source. (Default) 0 0 0 1 0: Select **CPUTIN** as SYSFAN monitoring source. 0 0 0 1 1: Select **AUXTIN0** as SYSFAN monitoring source. 0 0 1 0 0: Select **AUXTIN1** as SYSFAN monitoring source. 0 0 1 0 1: Select **AUXTIN2** as SYSFAN monitoring source. 0 0 1 1 0: Select **VTIN0** as SYSFAN monitoring source. 0 0 1 1 1: Reserved. 0 1 0 0 0: Select **SMBUSMASTER 0** as SYSFAN monitoring source. 0 1 0 0 1: Select **SMBUSMASTER 1** as SYSFAN monitoring source. 0 1 0 1 0: Select **SMBUSMASTER 2** as SYSFAN monitoring source. 0 1 0 1 1: Select **SMBUSMASTER 3** as SYSFAN monitoring source. 0 1 1 0 0: Select **SMBUSMASTER 4** as SYSFAN monitoring source. 0 1 1 0 1: Select **SMBUSMASTER 5** as SYSFAN monitoring source. 0 1 1 1 0: Select **SMBUSMASTER 6** as SYSFAN monitoring source. 0 1 1 1 1: Select **SMBUSMASTER 7** as SYSFAN monitoring source. 1 0 0 0 0: Select **PECI Agent 0** as SYSFAN monitoring source. 1 0 0 0 1: Select **PECI Agent 1** as SYSFAN monitoring source. 1 0 0 1 0: Select **PCH_CHIP_CPU_MAX_TEMP** as SYSFAN monitoring source. 1 0 0 1 1: Select **PCH_CHIP_TEMP** as SYSFAN monitoring source. 1 0 1 0 0: Select **PCH_CPU_TEMP** as SYSFAN monitoring source. 1 0 1 0 1: Select **PCH_MCH_TEMP** as SYSFAN monitoring source. 1 0 1 1 0: Select **PCH_DIM0_TEMP** as SYSFAN monitoring source. 1 0 1 1 1: Select **PCH_DIM1_TEMP** as SYSFAN monitoring source. 1 1 0 0 0: Select **PCH_DIM2_TEMP** as SYSFAN monitoring source. 1 1 0 0 1: Select **PCH_DIM3_TEMP** as SYSFAN monitoring source. 1 1 0 1 0: Select **BYTE_TEMP** as SYSFAN monitoring source.

9.136 CPUFANOUT Temperature Step Register – Index 3Ah (Bank 2)

Attribute: Read/Write

Size: 8 bits

BIT	7	6	5	4	3	2	1	0
BIT	CPUFANOUT Temperature Step (CPU_TEMP_STEP)							
DEFAULT	0							

BIT	DESCRIPTION
7-0	**CPUFANOUT Temperature Step**

9.137 CPUFANOUT Temperature Step Tolerance Register – Index 3Bh (Bank 2)

Attribute: Read/Write

Size: 8 bits

BIT	7	6	5	4	3	2	1	0
BIT	CPUFANOUT Temperature Step Tolerance (CPU_TEMP_STEP_TOL)							
DEFAULT	0							

BIT	DESCRIPTION
7-0	**CPUFANOUT Temperature Step Tolerance**

9.138 CPUFANOUT Weight Step Register – Index 3Ch (Bank 2)

Attribute: Read/Write

Size: 8 bits

BIT	7	6	5	4	3	2	1	0
BIT	CPUFANOUT Weight Step (CPU_WEIGHT_STEP)							
DEFAULT	0							

BIT	DESCRIPTION
7-0	**CPUFANOUT Weight Step**

9.139 CPUFANOUT Temperature Base Register – Index 3Dh (Bank 2)

Attribute: Read/Write

Size: 8 bits

BIT	7	6	5	4	3	2	1	0
NAME	CPUFANOUT Temperature Base (CPU_TEMP_BASE)							
DEFAULT	0							

BIT	DESCRIPTION
7-0	**CPUFANOUT Temperature Base**

9.140 CPUFANOUT Temperature Fan Duty Base Register – Index 3Eh (Bank 2)

Attribute: Read/Write

Size: 8 bits

BIT	7	6	5	4	3	2	1	0
NAME	CPUFANOUT Temperature Base (CPU_FC_BASE)							
DEFAULT	0							

BIT	DESCRIPTION
7-0	**CPUFANOUT Start point of Fan Duty increasing**

9.141 CPUFAN PECIERR DUTY Enable Register – Index 3Fh (Bank 2)

Attribute: Read/Write

Size: 8 bits

BIT	7	6	5	4	3	2	1	0
NAME	Reserved						EN_CPU_PECIERR_DUTY	

DEFAULT	0	0	0

BIT	DESCRIPTION
7-2	**Reserved**
1-0	**EN_CPU_PECIERR_DUTY** 00: Disable PECIERR DUTY FANOUT (default) 01: Enable PECIERR DUTY FANOUT, Used Index 41 **PECI_ERR_CPUOUT** Value for CPUFANOUT. 10,11: Keep Full Speed

9.142 Reserved Register – Index 40h (Bank 2)

9.143 CPUFANOUT Pre-Configured Register For PECI Error – Index 41h (Bank 2)

Attribute: Read/Write

Size: 8 bits

BIT	7	6	5	4	3	2	1	0
NAME	**CPUFANOUT pre-configured register for PECI error (PECI_ERR_CPUOUT)**							
DEFAULT	1	1	1	1	1	1	1	1

BIT	DESCRIPTION
7-0	**CPUFANOUT pre-configured register for PECI error.**

9.144 Reserved Register – Index 42h ~ FFh (Bank 1)

9.145 Reserved Register – Index 00h (Bank 3)

9.146 Reserved Register – Index 01h (Bank 3)

9.147 Reserved Register – Index 02h (Bank 3)

9.148 Reserved Register – Index 03h (Bank 3)

9.149 Reserved Register – Index 04h (Bank 3)

9.150 Reserved Register – Index 05h (Bank 3)

9.151 Reserved Register – Index 06h (Bank 3)

9.152 Reserved Register – Index 07h (Bank 3)

9.153 Reserved Register – Index 08h (Bank 3)

9.154 Reserved Register – Index 09h (Bank 3)

9.155 Reserved Register – Index 0Ch (Bank 3)

9.156 Reserved Register – Index 0Dh (Bank 3)

9.157 Reserved Register – Index 20h (Bank 3)

9.158 Reserved Register – Index 21h (Bank 3)

9.159 Reserved Register – Index 22h (Bank 3)

9.160 Reserved Register – Index 23h (Bank 3)

9.161 Reserved Register – Index 24h (Bank 3)

9.162 Reserved Register – Index 25h~26h (Bank 3)

9.163 Reserved Register – Index 27h (Bank 3)

9.164 Reserved Register – Index 28h (Bank 3)

9.165 Reserved Register – Index 29h (Bank 3)

9.166 Reserved Register – Index 2Ah (Bank 3)

9.167 Reserved Register – Index Index 2Bh~30h (Bank 3)

9.168 Reserved Register – Index 31h (Bank 3)

9.169 Reserved Register – Index 32h~34h(Bank 3)

9.170 Reserved Register – Index 35h (Bank 3)

9.171 Reserved Register – Index 36h (Bank 3)

9.172 Reserved Register – Index 37h (Bank 3)

9.173 Reserved Register – Index 38h (Bank 3)

9.174 Reserved Register – Index 39h (Bank 3)

9.175 Reserved Register – Index 3Ah (Bank 3)

9.176 Reserved Register – Index 3Bh (Bank 3)

9.177 Reserved Register – Index 3Ch (Bank 3)

9.178 Reserved Register – Index 3Dh (Bank 3)

9.179 Reserved Register – Index 3Eh (Bank 3)

9.180 Reserved Register – Index 3Fh (Bank 3)

9.181 Reserved Register – Index 40h (Bank 3)

9.182 Reserved Register – Index 41h (Bank 3)

9.183 Reserved Register – Index 42h ~ FFh (Bank 3)

9.184 PCH_CHIP_CPU_MAX_TEMP Register – Index 00h (Bank 4)

Attribute: Read
Size: 8 bits

BIT	7	6	5	4	3	2	1	0
NAME	PCH_CHIP_CPU_MAX_TEMP							
DEFAULT	0	0	0	0	0	0	0	0

BIT	DESCRIPTION
7-0	**PCH_CHIP_CPU_MAX_TEMP:** The maximum temperature in absolute degree C, of the CPU and MCH.

9.185 PCH_CHIP_TEMP Register – Index 01h (Bank 4)

Attribute: Read
Size: 8 bits

BIT	7	6	5	4	3	2	1	0
NAME	PCH_CHIP_TEMP							
DEFAULT	0	0	0	0	0	0	0	0

BIT	DESCRIPTION
7-0	**PCH_CHIP_TEMP** The IBX_CHIP temperature in degree C.

9.186 PCH_CPU_TEMP_H Register – Index 02h (Bank 4)

Attribute: Read
Size: 8 bits

BIT	7	6	5	4	3	2	1	0
NAME	PCH_CPU_TEMP_H							
DEFAULT	0	0	0	0	0	0	0	0

BIT	DESCRIPTION
7-0	**PCH_CPU_TEMP_H** The CPU temperature in degree C. (Integer Part)

9.187 PCH_CPU_TEMP_L Register – Index 03h (Bank 4)

Attribute: Read

Size: 8 bits

BIT	7	6	5	4	3	2	1	0
NAME	PCH_CPU_TEMP_L						Reserved	Reading _Flag
DEFAULT	0	0	0	0	0	0	0	0

BIT	DESCRIPTION
7-2	**PCH_CPU_TEMP_L** The CPU temperature in degree C. (Fractional Part)
1	**Reserved**
0	**Reading_Flag:** If there is an error when the IBX read the data from the CPU, then Bit0 is set to '1'.

9.188 PCH_MCH_TEMP Register – Index 04h (Bank 4)

Attribute: Read

Size: 8 bits

BIT	7	6	5	4	3	2	1	0
NAME	PCH_MCH_TEMP							
DEFAULT	0	0	0	0	0	0	0	0

BIT	DESCRIPTION
7-0	**PCH_MCH_TEMP** The MCH temperature in degree C.

9.189 PCH_DIM0_TEMP Register – Index 05h (Bank 4)

Attribute: Read

Size: 8 bits

BIT	7	6	5	4	3	2	1	0
NAME	PCH_DIM0_TEMP							
DEFAULT	0	0	0	0	0	0	0	0

BIT	DESCRIPTION

BIT	DESCRIPTION
7-0	**PCH_DIM0_TEMP** The DIM0 temperature in degree C.

9.190 PCH_DIM1_TEMP Register – Index 06h (Bank 4)

Attribute: Read
Size: 8 bits

BIT	7	6	5	4	3	2	1	0
NAME	PCH_DIM1_TEMP							
DEFAULT	0	0	0	0	0	0	0	0

BIT	DESCRIPTION
7-0	**PCH_DIM1_TEMP** The DIM1 temperature in degree C.

9.191 PCH_DIM2_TEMP Register – Index 07h (Bank 4)

Attribute: Read
Size: 8 bits

BIT	7	6	5	4	3	2	1	0
NAME	PCH_DIM2_TEMP							
DEFAULT	0	0	0	0	0	0	0	0

BIT	DESCRIPTION
7-0	**PCH_DIM2_TEMP** The DIM2 temperature in degree C.

9.192 PCH_DIM3_TEMP Register – Index 08h (Bank 4)

Attribute: Read
Size: 8 bits

BIT	7	6	5	4	3	2	1	0
NAME	PCH_DIM3_TEMP							
DEFAULT	0	0	0	0	0	0	0	0

BIT	DESCRIPTION
7-0	**PCH_DIM3_TEMP** The DIM3 temperature in degree C.

9.193 PCH_TSI0_TEMP_H Register – Index 09h (Bank 4)

Attribute: Read
Size: 8 bits

BIT	7	6	5	4	3	2	1	0
NAME	PCH_TSI0_TEMP_H							
DEFAULT	0	0	0	0	0	0	0	0

BIT	DESCRIPTION
7-0	**PCH_TSI0_TEMP_H** The TSI High-Byte temperature in degree C.

9.194 PCH_TSI0_TEMP_L Register – Index 0Ah (Bank 4)

Attribute: Read
Size: 8 bits

BIT	7	6	5	4	3	2	1	0
NAME	PCH_TSI0_TEMP_L			Reserved				
DEFAULT	0	0	0	0	0	0	0	0

BIT	DESCRIPTION
7-5	**PCH_TSI0_TEMP_L** The TSI Low-Byte temperature in degree C.
4-0	**Reserved**

9.195 PCH_TSI1_TEMP_H Register – Index 0Bh (Bank 4)

Attribute: Read
Size: 8 bits

BIT	7	6	5	4	3	2	1	0
NAME	PCH_TSI1_TEMP_H							
DEFAULT	0	0	0	0	0	0	0	0

BIT	DESCRIPTION
7-0	**PCH_TSI1_TEMP_H** The TSI High-Byte temperature in degree C.

9.196 PCH_TSI1_TEMP_L Register – Index 0Ch (Bank 4)

Attribute: Read
Size: 8 bits

BIT	7	6	5	4	3	2	1	0
NAME	PCH_TSI1_TEMP_L			Reserved				
DEFAULT	0	0	0	0	0	0	0	0

BIT	DESCRIPTION
7-5	**PCH_TSI1_TEMP_L** The TSI Low-Byte temperature in degree C.
4-0	**Reserved**

9.197 PCH_TSI2_TEMP_H Register – Index 0Dh (Bank 4)

Attribute: Read
Size: 8 bits

BIT	7	6	5	4	3	2	1	0
NAME	PCH_TSI2_TEMP_H							
DEFAULT	0	0	0	0	0	0	0	0

BIT	DESCRIPTION
7-0	**PCH_TSI2_TEMP_H** The TSI High-Byte temperature in degree C.

9.198 PCH_TSI2_TEMP_L Register – Index 0Eh (Bank 4)

Attribute: Read

Size: 8 bits

BIT	7	6	5	4	3	2	1	0
NAME	PCH_TSI2_TEMP_L			Reserved				
DEFAULT	0	0	0	0	0	0	0	0

BIT	DESCRIPTION
7-5	**PCH_TSI2_TEMP_L** The TSI Low-Byte temperature in degree C.
4-0	**Reserved**

9.199 PCH_TSI3_TEMP_H Register – Index 0Fh (Bank 4)

Attribute: Read

Size: 8 bits

BIT	7	6	5	4	3	2	1	0
NAME	PCH_TSI3_TEMP_H							
DEFAULT	0	0	0	0	0	0	0	0

BIT	DESCRIPTION
7-0	**PCH_TSI3_TEMP_H** The TSI High-Byte temperature in degree C.

9.200 PCH_TSI3_TEMP_L Register – Index 10h (Bank 4)

Attribute: Read

Size: 8 bits

BIT	7	6	5	4	3	2	1	0
NAME	PCH_TSI3_TEMP_L			Reserved				
DEFAULT	0	0	0	0	0	0	0	0

BIT	DESCRIPTION
7-5	**PCH_TSI3_TEMP_L** The TSI Low-Byte temperature in degree C.
4-0	**Reserved**

9.201 PCH_TSI4_TEMP_H Register – Index 11h (Bank 4)

Attribute: Read
Size: 8 bits

BIT	7	6	5	4	3	2	1	0
NAME	PCH_TSI4_TEMP_H							
DEFAULT	0	0	0	0	0	0	0	0

BIT	DESCRIPTION
7-0	**PCH_TSI4_TEMP_H** The TSI High-Byte temperature in degree C.

9.202 PCH_TSI4_TEMP_L Register – Index 12h (Bank 4)

Attribute: Read
Size: 8 bits

BIT	7	6	5	4	3	2	1	0
NAME	PCH_TSI4_TEMP_L			Reserved				
DEFAULT	0	0	0	0	0	0	0	0

BIT	DESCRIPTION
7-5	**PCH_TSI4_TEMP_L** The TSI Low-Byte temperature in degree C.
4-0	**Reserved**

9.203 PCH_TSI5_TEMP_H Register – Index 13h (Bank 4)

Attribute: Read
Size: 8 bits

BIT	7	6	5	4	3	2	1	0
NAME	PCH_TSI5_TEMP_H							
DEFAULT	0	0	0	0	0	0	0	0

BIT	DESCRIPTION
7-0	**PCH_TSI5_TEMP_H** The TSI High-Byte temperature in degree C.

9.204 PCH_TSI5_TEMP_L Register – Index 14h (Bank 4)

Attribute: Read
Size: 8 bits

BIT	7	6	5	4	3	2	1	0
NAME	PCH_TSI5_TEMP_L			Reserved				
DEFAULT	0	0	0	0	0	0	0	0

BIT	DESCRIPTION

BIT	DESCRIPTION
7-5	**PCH_TSI5_TEMP_L** The TSI Low-Byte temperature in degree C.
4-0	**Reserved**

9.205 PCH_TSI6_TEMP_H Register – Index 15h (Bank 4)

Attribute: Read
Size: 8 bits

BIT	7	6	5	4	3	2	1	0
NAME	PCH_TSI6_TEMP_H							
DEFAULT	0	0	0	0	0	0	0	0

BIT	DESCRIPTION
7-0	**PCH_TSI6_TEMP_H** The TSI High-Byte temperature in degree C.

9.206 PCH_TSI6_TEMP_L Register – Index 16h (Bank 4)

Attribute: Read
Size: 8 bits

BIT	7	6	5	4	3	2	1	0
NAME	PCH_TSI6_TEMP_L			Reserved				
DEFAULT	0	0	0	0	0	0	0	0

BIT	DESCRIPTION
7-5	**PCH_TSI6_TEMP_L** The TSI Low-Byte temperature in degree C.
4-0	**Reserved**

9.207 PCH_TSI7_TEMP_H Register – Index 17h (Bank 4)

Attribute: Read
Size: 8 bits

BIT	7	6	5	4	3	2	1	0
NAME	PCH_TSI7_TEMP_H							
DEFAULT	0	0	0	0	0	0	0	0

BIT	DESCRIPTION
7-0	**PCH_TSI7_TEMP_H** The TSI High-Byte temperature in degree C.

9.208 PCH_TSI7_TEMP_L Register – Index 18h (Bank 4)

Attribute: Read
Size: 8 bits

BIT	7	6	5	4	3	2	1	0

NAME	PCH_TSI7_TEMP_L			Reserved				
DEFAULT	0	0	0	0	0	0	0	0

BIT	DESCRIPTION
7-5	**PCH_TSI7_TEMP_L** The TSI Low-Byte temperature in degree C.
4-0	**Reserved**

9.209 ByteTemp_H Register – Index 19h (Bank 4)

Attribute: Read

Size: 8 bits

BIT	7	6	5	4	3	2	1	0
NAME	ByteTemp_H							
DEFAULT	0	0	0	0	0	0	0	0

BIT	DESCRIPTION
7-0	**ByteTemp_H** The TSI Byte format High-Byte temperature in degree C.

9.210 ByteTemp_L Register – Index 1Ah (Bank 4)

Attribute: Read

Size: 8 bits

BIT	7	6	5	4	3	2	1	0
NAME	ByteTemp_L							
DEFAULT	0	0	0	0	0	0	0	0

BIT	DESCRIPTION
7-0	**ByteTemp_L** The TSI Byte format Low-Byte temperature in degree C.

9.211 Reserved Register – Index 1Bh ~ 22h (Bank 4)

9.212 Reserved Register – Index 23h (Bank 4)

9.213 Reserved Register – Index 24h (Bank 4)

9.214 Reserved Register – Index 25h (Bank 4)

9.215 Reserved Register – Index 26h (Bank 4)

9.216 AVCC High Limit Compared Voltage Register – Index 27h (Bank 4)

Attribute: Read/Write

Size: 8 bits

BIT	7	6	5	4	3	2	1	0
NAME	AVCC High Limit Compared Voltage (AVCC _LimtH)							
DEFAULT	1	1	1	0	0	0	0	1

BIT	DESCRIPTION
7-0	**AVCC High Limit Compared Voltage.** Default: 0xE1h (1.8V *2)

9.217 AVCC Low Limit Compared Voltage Register – Index 28h (Bank 4)

Attribute: Read/Write

Size: 8 bits

BIT	7	6	5	4	3	2	1	0
NAME	AVCC Low Limit Compared Voltage (AVCC_LimtH)							
DEFAULT	1	0	0	1	0	1	1	0

BIT	DESCRIPTION
7-0	**AVCC Low Limit Compared Voltage (AVCC_LimtH).** Default: 0x96h (1.2V *2)

9.218 Reserved Register – Index 29h ~ 41h (Bank 4)

9.219 Voltage Comparation Interrupt Status Register - Index 42h (Bank 4)

Attribute: Read Only

Size: 8 bits

BIT	7	6	5	4	3	2	1	0
NAME	RESERVED					AVCC_Warn	Reserved	Reserved
DEFAULT	0	0	0	0	0	0	0	0

BIT	DESCRIPTION
7-3	**Reserved**
2	**AVCC_Warn.** A one indicates the limit of AVCC voltage has been exceeded.
1-0	**Reserved**

9.220 Reserved Register – Index 43h ~ 49h (Bank 4)

9.221 Reserved Register – Index 4Ah (Bank 4)

9.222 Reserved Register – Index 4Bh (Bank 4)

9.223 VTIN0 Temperature Sensor Offset Register – Index 4Ch (Bank 4)

Attribute: Read/Write

Size: 8 bits

BIT	7	6	5	4	3	2	1	0
NAME	OFFSET<7:0>							
DEFAULT	0	0	0	0	0	0	0	0

BIT	DESCRIPTION
7-0	**VTIN0 Temperature Offset Value.** The value in this register is added to the monitored value so that the read value will be the sum of the monitored value and this offset value.

9.224 Reserved Register – Index 4Eh ~ 4Fh (Bank 4)

9.225 Interrupt Status Register 3 – Index 50h (Bank 4)

Attribute: Read Clear

Size: 8 bits

BIT	7	6	5	4	3	2	1	0
NAME	RESERVED						VBAT	3VSB
DEFAULT	0	0	0	0	0	0	0	0

BIT	DESCRIPTION
7-3	**Reserved.**
1	**VBAT.** A one indicates the high or low limit of VBAT has been exceeded.
0	**3VSB.** A one indicates the high or low limit of 3VSB has been exceeded.

9.226 SMI# Mask Register 4 – Index 51h (Bank 4)

Attribute: Read/Write

Size: 8 bits

BIT	7	6	5	4	3	2	1	0
NAME	RESERVED	TAR5	TAR4	TAR3	RESERVED		SMSKVBAT	SMSKVSB
DEFAULT	0	1	1	1	0	0	1	1

BIT	DESCRIPTION
7	**Reserved.**
6	**TAR5.** A one disables the corresponding interrupt status bit for the ~~SMI~~ interrupt. (See Interrupt Status Register 3 – Index 50h (Bank 4))
5	**TAR4.** A one disables the corresponding interrupt status bit for the ~~SMI~~ interrupt. (See Interrupt Status Register 3 – Index 50h (Bank 4))
4	**TAR3.** A one disables the corresponding interrupt status bit for the ~~SMI~~ interrupt. (See Interrupt Status Register 3 – Index 45h (Bank 0))
3-2	**Reserved.**

BIT	DESCRIPTION
1	**SMSKVBAT.** A one disables the corresponding interrupt status bit for the $\overline{SMI}$ interrupt. (See Interrupt Status Register 3 – Index 50h (Bank 4))
0	**SMSKVSB.** A one disables the corresponding interrupt status bit for the $\overline{SMI}$ interrupt. (See Interrupt Status Register 3 – Index 50h (Bank 4))

9.227 Reserved Register – Index 52h ~ 53h (Bank 4)

9.228 Reserved Register – Index 54h (Bank 4)

9.229 CPUTIN Temperature Sensor Offset Register – Index 55h (Bank 4)

Attribute: Read/Write

Size: 8 bits

BIT	7	6	5	4	3	2	1	0
NAME	OFFSET<7:0>							
DEFAULT	0	0	0	0	0	0	0	0

BIT	DESCRIPTION
7-0	**CPUTIN Temperature Offset Value.** The value in this register will be added to the monitored value so that the read value is the sum of the monitored value and this offset value.

9.230 AUXTIN0 Temperature Sensor Offset Register – Index 56h (Bank 4)

Attribute: Read/Write

Size: 8 bits

BIT	7	6	5	4	3	2	1	0
NAME	OFFSET<7:0>							
DEFAULT	0	0	0	0	0	0	0	0

BIT	DESCRIPTION
7-0	**AUXTIN0 Temperature Offset Value.** The value in this register is added to the monitored value so that the read value is the sum of the monitored value and this offset value.

9.231 Reserved Register – Index 57h-58h (Bank 4)

9.232 Real Time Hardware Status Register I – Index 59h (Bank 4)

Attribute: Read Only

Size: 8 bits

BIT	7	6	5	4	3	2	1	0
NAME	CPUFANIN _STS	SYSFANIN _STS	CPUTIN _STS	Reserved	3VCC _STS	AVCC _STS	Reserved	CPUVCORE _STS

DEFAULT	0	0	0	0	0	0	0	0

BIT	DESCRIPTION
7	**CPUFANIN_STS. CPUFANIN Status.** 1: Fan speed count is over the threshold value. 0: Fan speed count is in the allowed range.
6	**SYSFANIN_STS. SYSFANIN Status.** 1: Fan speed count is over the threshold value. 0: Fan speed count is in the allowed range.
5	**CPUTIN_STS. CPUTIN Temperature Sensor Status.** 1: Temperature exceeds the over-temperature value. 0: Temperature is under the hysteresis value.
4	**Reserved**
3	**3VCC_STS. 3VCC Voltage Status.** 1: 3VCC voltage is over or under the allowed range. 0: 3VCC voltage is in the allowed range.
2	**AVCC_STS. AVCC Voltage Status.** 1: AVCC voltage is over or under the allowed range. 0: AVCC voltage is in the allowed range.
1	**Reserved**
0	**CPUVCORE_STS. CPUVCORE Voltage Status.** 1: CPUVCORE voltage is over or under the allowed range. 0: CPUVCORE voltage is in the allowed range.

9.233 Real Time Hardware Status Register II – Index 5Ah (Bank 4)

Attribute: Read Only

Size: 8 bits

BIT	7	6	5	4	3	2	1	0
NAME	TAR2 _STS	TAR1 _STS	AUXTIN _STS	Reserved				
DEFAULT	0	0	0	0	0	0	0	0

BIT	DESCRIPTION
7	**TAR2_STS. Smart Fan of CPUFANIN Warning Status.** 1: Selected temperature has been over the target temperature for three minutes at full fan speed in Thermal Cruise Mode and SMART FAN^{TM} IV. 0: Selected temperature has not reached the warning range.
6	**TAR1_STS. Smart Fan of SYSFANIN Warning Status.** 1: SYSTIN temperature has been over the target temperature for three minutes at full fan speed in Thermal Cruise Mode and SMART FAN^{TM} IV. 0: SYSTIN temperature has not reached the warning range.
5	**AUXTIN_STS. AUXTIN Temperature Sensor Status.** 1: Temperature exceeds the over-temperature value. 0: Temperature is under the hysteresis value.
4-0	**Reserved**

9.234 Real Time Hardware Status Register III – Index 5Bh (Bank 4)

Attribute: Read Only

Size: 8 bits

BIT	7	6	5	4	3	2	1	0
NAME	Reserved	TAR5 _STS	Reserved	VIN4 _STS	TAR4 _STS	TAR3 _STS	VBAT _STS	VSB _STS
DEFAULT	0	0	0	0	0	0	0	0

BIT	DESCRIPTION
7	**Reserved**
6	**TAR5_STS. Smart Fan of AUXFANIN2 Warning Status.** 1: The selected temperature has been over the target temperature for three minutes at full fan speed in Thermal Cruise Mode and SMART FAN™ IV. 0: The selected temperature has not reached the warning range.
5	**Reserved**
4	**VIN4_STS. VIN4 Voltage Status.** 1: VIN4 voltage is over or under the allowed range. 0: VIN4 voltage is in the allowed range.
3	**TAR4_STS. Smart Fan of AUXFANIN1 Warning Status.** 1: The selected temperature has been over the target temperature for three minutes at full fan speed in Thermal Cruise Mode and SMART FAN™ IV. 0: The selected temperature has not reached the warning range.
2	**TAR3_STS. Smart Fan of AUXFANIN0 Warning Status.** 1: The selected temperature has been over the target temperature for three minutes at full fan speed in Thermal Cruise Mode and SMART FAN™ IV. 0: The selected temperature has not reached the warning range.
1	**VBAT_STS. VBAT Voltage Status.** 1: The VBAT voltage is over or under the allowed range. 0: The VBAT voltage is in the allowed range.
0	**VSB_STS. 3VSB Voltage Status.** 1: The 3VSB voltage is over or under the allowed range. 0: The 3VSB voltage is in the allowed range.

9.235 Reserved Register – Index 5Ch ~ 5Fh (Bank 4)

9.236 Reserved Register – Index 60h (Bank 4)

9.237 Reserved Register – Index 61h (Bank 4)

9.238 Reserved Register – Index 62h (Bank 4)

9.239 Reserved Register – Index 63h (Bank 4)

9.240 Reserved Register – Index 64h (Bank 4)

9.241 Reserved Register – Index 65h (Bank 4)

9.242 Reserved Register – Index 66h (Bank 4)

9.243 Reserved Register – Index 67h (Bank 4)

9.244 Reserved Register – Index 68h ~ 7Fh (Bank 4)

9.245 Value RAM — Index 80h ~ 96h (Bank 4)

ADDRESS A6-A0	DESCRIPTION
80h	CPUVCORE reading
81h	Reserved
82h	AVCC reading
83h	3VCC reading
84h	Reserved
85h	Reserved
86h	VIN4 reading
87h	3VSB reading
88h	VBAT reading
89h	VTT reading
8Ah	Reserved
8Bh	Reserved
8Ch	VIN2 reading
8Dh	VIN3 reading
8Eh	Reserved
8Fh	Reserved
90h	Reserved
91h	CPUTIN temperature reading
92h	AUXTIN0 temperature reading
93h	Reserved
94h	Reserved
95h	VTIN0 temperature reading

9.246 (SYSFANIN) FANIN1 COUNT High-byte Register – Index B0h (Bank 4)

Attribute: Read

Size: 8 bits

BIT	7	6	5	4	3	2	1	0
NAME	FANCNT1 [12:5]							
DEFAULT	1	1	1	1	1	1	1	1

BIT	DESCRIPTION
7-0	**FANCNT1_H:** 13-bit SYSFANIN Fan Count, High Byte

9.247 (SYSFANIN) FANIN1 COUNT Low-byte Register – Index B1h (Bank 4)

Attribute: Read
Size: 8 bits

BIT	7	6	5	4	3	2	1	0
NAME	RESERVED			FANCNT1 [4:0]				
DEFAULT	0			1F				

BIT	DESCRIPTION
7-5	**Reserved.**
4-0	**FANCNT1_L:** 13-bit SYSFANIN Fan Count, Low Byte

9.248 (CPUFANIN) FANIN2 COUNT High-byte Register – Index B2h (Bank 4)

Attribute: Read
Size: 8 bits

BIT	7	6	5	4	3	2	1	0
NAME	FANCNT2 [12:5]							
DEFAULT	1	1	1	1	1	1	1	1

BIT	DESCRIPTION
7-0	**FANCNT2_H:** 13-bit CPUFANIN Fan Count, High Byte

9.249 (CPUFANIN) FANIN2 COUNT Low-byte Register – Index B3h (Bank 4)

Attribute: Read
Size: 8 bits

BIT	7	6	5	4	3	2	1	0
NAME	RESERVED			FANCNT2 [4:0]				
DEFAULT	0			1F				

BIT	DESCRIPTION
7-5	**Reserved.**
4-0	**FANCNT2_L:** 13-bit CPUFANIN Fan Count, Low Byte

9.250 Reserved Register – Index B4h (Bank 4)

9.251 Reserved Register – Index B5h (Bank 4)

9.252 Reserved Register – Index B6h (Bank 4)

9.253 Reserved Register – Index B7h (Bank 4)

9.254 Reserved Register – Index B8h (Bank 4)

9.255 Reserved Register – Index B9h (Bank 4)

9.256 Reserved Register – Index BAh ~ BFh (Bank 4)

9.257 SYSFANIN SPEED HIGH-BYTE VALUE (RPM) - Index C0h (Bank 4)

Attribute: Read Only
Size: 8 bits

BIT	7	6	5	4	3	2	1	0
NAME	SYSFANIN SPEED HIGH-BYTE VALUE							
DEFAULT	0	0	0	0	0	0	0	0

BIT	DESCRIPTION
7-0	**SYSFANIN SPEED HIGH-BYTE VALUE.**

9.258 SYSFANIN SPEED LOW-BYTE VALUE (RPM) - Index C1h (Bank 4)

Attribute: Read Only
Size: 8 bits

BIT	7	6	5	4	3	2	1	0
NAME	SYSFANIN SPEED LOW-BYTE VALUE							
DEFAULT	0	0	0	0	0	0	0	0

BIT	DESCRIPTION
7-0	**SYSFANIN SPEED LOW-BYTE VALUE.**

9.259 CPUFANIN SPEED HIGH-BYTE VALUE (RPM) – Index C2h (Bank 4)

Attribute: Read Only
Size: 8 bits

BIT	7	6	5	4	3	2	1	0
NAME	CPUFANIN SPEED HIGH-BYTE VALUE							
DEFAULT	0	0	0	0	0	0	0	0

BIT	DESCRIPTION
7-0	**CPUFANIN SPEED HIGH-BYTE VALUE.**

9.260 CPUFANIN SPEED LOW-BYTE VALUE (RPM) – Index C3h (Bank 4)

Attribute: Read Only

Size: 8 bits

BIT	7	6	5	4	3	2	1	0
NAME	CPUFANIN SPEED LOW-BYTE VALUE							
DEFAULT	0	0	0	0	0	0	0	0

BIT	DESCRIPTION
7-0	**CPUFANIN SPEED LOW-BYTE VALUE.**

9.261 Reserved Register – Index C4h (Bank 4)

9.262 Reserved Register – Index C5h (Bank 4)

9.263 Reserved Register – Index C6h (Bank 4)

9.264 Reserved Register – Index C7h (Bank 4)

9.265 Reserved Register – Index C8h (Bank 4)

9.266 Reserved Register – Index C9h (Bank 4)

9.267 Reserved Register – Index 00h ~ 53h (Bank 5)

9.268 Value RAM 2 — Index 50h-5Fh (Bank 5)

ADDRESS A6-A0	DESCRIPTION
54h	**3VSB High Limit**
55h	**3VSB Low Limit**
56h	**VBAT High Limit**
57h	**VBAT Low Limit**
58h	**VTT High Limit**
59h	**VTT Low Limit**
5Ah	**Reserved**
5Bh	**Reserved**
5Ch	**Reserved**
5Dh	**Reserved**
5Eh	**VIN2 High Limit**
5Fh	**VIN2 Low Limit**
60h	**VIN3 High Limit**

ADDRESS A6-A0	DESCRIPTION
61h	**VIN3 Low Limit**
62h	**Reserved**
63h	**Reserved**

9.269 SMI# Mask Register 1 – Index 66h (Bank 5)

Attribute: Read/Write

Size: 8 bits

BIT	7	6	5	4	3	2	1	0
NAME	Reserved	Reserved	Reserved	VIN3	VIN2	Reserved	Reserved	VTT
DEFAULT	0	0	1	1	1	1	1	1

BIT	DESCRIPTION	
7	Reserved	A one disables the corresponding interrupt status bit for the $\overline{\text{SMI}}$ interrupt. (See Interrupt Status Register 1 – Index 41h (Bank0))
6	Reserved	
5	Reserved	
4	VIN3	
3	VIN2	
2	Reserved	
1	Reserved	
0	**VTT**	

9.270 Interrupt Status Register – Index 67h (Bank 5)

Attribute: Read Clear

Size: 8 bits

BIT	7	6	5	4	3	2	1	0
NAME	Reserved	Reserved	Reserved	VIN3	VIN2	reserved	Reserved	VTT
DEFAULT	0	0	0	0	0	0	0	0

BIT	DESCRIPTION
7	**Reserved**
6	**Reserved**
5	**Reserved**
4	**VIN3.** A one indicates the high or low limit of VIN3 has been exceeded.
3	**VIN2.** A one indicates the high or low limit of VIN2 has been exceeded.
2	**Reserved**
1	**Reserved**
0	**VTT.** A one indicates the high or low limit of VTT has been exceeded.

9.271 Real Time Hardware Status Register – Index 68h (Bank 5)

Attribute: Read Only
Size: 8 bits

BIT	7	6	5	4	3	2	1	0
NAME	Reserved	Reserved	Reserved	VIN3 _STS	VIN2 _STS	Reserved	Reserved	VTT _STS
DEFAULT	0	0	0	0	0	0	0	0

BIT	DESCRIPTION
7	**Reserved**
6	**Reserved**
5	**Reserved**
4	**VIN3_STS. VIN3 Voltage Status.** 1: VIN3 voltage is over or under the allowed range. 0: VIN3 voltage is in the allowed range.
3	**VIN2_STS. VIN2 Voltage Status.** 1: VIN2 voltage is over or under the allowed range. 0: VIN2 voltage is in the allowed range.
2	**Reserved**
1	**Reserved**
0	**VTT_STS. VTT Voltage Status.** 1: VTT voltage is over or under the allowed range. 0: VTT voltage is in the allowed range.

9.272 Reserved Register – Index 69h ~ FFh (Bank 5)

9.273 Close-Loop Fan Control RPM mode Register – Index 00 (Bank 6)

Attribute: Read/Write
Size: 8 bits

BIT	7	6	5	4	3	2	1	0
NAME	RESERVED						En_CPU_RPM	En_SYS_RPM
DEFAULT	0			0	0	0	0	0

BIT	DESCRIPTION
7-2	**RESERVED**
1	**En_CPU_RPM** 0: Disable SMART FAN^{TM} IV Close Loop Fan Control RPM Mode. 1: Enable SMART FAN^{TM} IV Close Loop Fan Control RPM Mode.
0	**En_SYS_RPM** 0: Disable SMART FAN^{TM} IV Close Loop Fan Control RPM Mode. 1: Enable SMART FAN^{TM} IV Close Loop Fan Control RPM Mode.

9.274 SYSFAN RPM Mode Tolerance Register – Index 01 (Bank 6)

Attribute: Read/Write

Size: 8 bits

BIT	7	6	5	4	3	2	1	0
NAME	RESERVED				Generic_Tol_ SYS_RPM			
DEFAULT	0				0			

BIT	DESCRIPTION
7-4	**RESERVED**
3-0	Tolerance of RPM mode, unit 50 RPM. If Enable RPM High Mode（Bank6 index6 bit0）, unit is 100 RPM.

9.275 CPUFAN RPM Mode Tolerance Register – Index 02 (Bank 6)

Attribute: Read/Write

Size: 8 bits

BIT	7	6	5	4	3	2	1	0
NAME	RESERVED				Generic_Tol_ CPU_RPM			
DEFAULT	0				0			

BIT	DESCRIPTION
7-4	**RESERVED**
3-0	Tolerance of RPM mode, unit 50 RPM. If Enable RPM High Mode（Bank6 index6 bit1）, unit is 100 RPM.

9.276 Reserved Register – Index 03 (Bank 6)

9.277 Reserved Register – Index 04 (Bank 6)

9.278 Reserved Register – Index 05 (Bank 6)

9.279 Enable RPM High Mode Register – Index 00 (Bank 6)

Attribute: Read/Write

Size: 8 bits

BIT	7	6	5	4	3	2	1	0
NAME	RESERVED						En_CPU_RPM_HIGH	En_SYS_RPM_HIGH
DEFAULT	0			0	0	0	0	0

BIT	DESCRIPTION

7-2	**RESERVED**
1	**En_CPU_RPM_HIGH** For High Speed Fan Control at RPM Mode, the unit is 100 RPM. Support 100 rpm ~ 25500 rpm Fan, 0: Disable 1: Enable
0	**En_SYS_RPM_HIGH** For High Speed Fan Control at RPM Mode, the unit is 100 RPM. Support 100 rpm ~ 25500 rpm Fan, 0: Disable 1: Enable

9.280 SMIOVT1 Temperature Source Select Register – Index 21 (Bank 6)

Attribute: Read/Write

Size: 8 bits

BIT	7	6	5	4	3	2	1	0
NAME	RESERVED			SMIOVT_SRC1				
DEFAULT	0	0	0	0	0	0	0	1

BIT	DESCRIPTION
7-5	**RESERVED**
4-0	**SMIOVT1 Temperature selection.** **Bits** **4 3 2 1 0** 0 0 0 0 1: Select **SYSTIN** as SYSFAN monitoring source. (Default) 0 0 0 1 0: Select **CPUTIN** as SYSFAN monitoring source. 0 0 0 1 1: Select **AUXTIN0** as SYSFAN monitoring source. 0 0 1 0 0: Select **AUXTIN1** as SYSFAN monitoring source. 0 0 1 0 1: Select **AUXTIN2** as SYSFAN monitoring source. 0 0 1 1 0: Select **VTIN0** as SYSFAN monitoring source. 0 0 1 1 1: Reserved. 0 1 0 0 0: Select **SMBUSMASTER 0** as SYSFAN monitoring source. 0 1 0 0 1: Select **SMBUSMASTER 1** as SYSFAN monitoring source. 0 1 0 1 0: Select **SMBUSMASTER 2** as SYSFAN monitoring source. 0 1 0 1 1: Select **SMBUSMASTER 3** as SYSFAN monitoring source. 0 1 1 0 0: Select **SMBUSMASTER 4** as SYSFAN monitoring source. 0 1 1 0 1: Select **SMBUSMASTER 5** as SYSFAN monitoring source. 0 1 1 1 0: Select **SMBUSMASTER 6** as SYSFAN monitoring source. 0 1 1 1 1: Select **SMBUSMASTER 7** as SYSFAN monitoring source. 1 0 0 0 0: Select **PECI Agent 0** as SYSFAN monitoring source. 1 0 0 0 1: Select **PECI Agent 1** as SYSFAN monitoring source. 1 0 0 1 0: Select **PCH_CHIP_CPU_MAX_TEMP** as SYSFAN monitoring source. 1 0 0 1 1: Select **PCH_CHIP_TEMP** as SYSFAN monitoring source. 1 0 1 0 0: Select **PCH_CPU_TEMP** as SYSFAN monitoring source. 1 0 1 0 1: Select **PCH_MCH_TEMP** as SYSFAN monitoring source. 1 0 1 1 0: Select **PCH_DIM0_TEMP** as SYSFAN monitoring source.

	1 0 1 1 1: Select **PCH_DIM1_TEMP** as SYSFAN monitoring source. 1 1 0 0 0: Select **PCH_DIM2_TEMP** as SYSFAN monitoring source. 1 1 0 0 1: Select **PCH_DIM3_TEMP** as SYSFAN monitoring source. 1 1 0 1 0: Select **BYTE_TEMP** as SYSFAN monitoring source.

9.281 SMIOVT2 Temperature Source Select Register – Index 22 (Bank 6)

Attribute: Read/Write
Size: 8 bits

BIT	7	6	5	4	3	2	1	0
NAME	RESERVED			SMIOVT_SRC2				
DEFAULT	0	0	0	0	0	0	1	0

BIT	DESCRIPTION
7-5	**RESERVED**
4-0	**SMIOVT2 Temperature selection.** **Bits** **4 3 2 1 0** 0 0 0 0 1: Select **SYSTIN** as SYSFAN monitoring source. (Default) 0 0 0 1 0: Select **CPUTIN** as SYSFAN monitoring source. 0 0 0 1 1: Select **AUXTIN0** as SYSFAN monitoring source. 0 0 1 0 0: Select **AUXTIN1** as SYSFAN monitoring source. 0 0 1 0 1: Select **AUXTIN2** as SYSFAN monitoring source. 0 0 1 1 0: Select **VTIN0** as SYSFAN monitoring source. 0 0 1 1 1: Reserved. 0 1 0 0 0: Select **SMBUSMASTER 0** as SYSFAN monitoring source. 0 1 0 0 1: Select **SMBUSMASTER 1** as SYSFAN monitoring source. 0 1 0 1 0: Select **SMBUSMASTER 2** as SYSFAN monitoring source. 0 1 0 1 1: Select **SMBUSMASTER 3** as SYSFAN monitoring source. 0 1 1 0 0: Select **SMBUSMASTER 4** as SYSFAN monitoring source. 0 1 1 0 1: Select **SMBUSMASTER 5** as SYSFAN monitoring source. 0 1 1 1 0: Select **SMBUSMASTER 6** as SYSFAN monitoring source. 0 1 1 1 1: Select **SMBUSMASTER 7** as SYSFAN monitoring source. 1 0 0 0 0: Select **PECI Agent 0** as SYSFAN monitoring source. 1 0 0 0 1: Select **PECI Agent 1** as SYSFAN monitoring source. 1 0 0 1 0: Select **PCH_CHIP_CPU_MAX_TEMP** as SYSFAN monitoring source. 1 0 0 1 1: Select **PCH_CHIP_TEMP** as SYSFAN monitoring source. 1 0 1 0 0: Select **PCH_CPU_TEMP** as SYSFAN monitoring source. 1 0 1 0 1: Select **PCH_MCH_TEMP** as SYSFAN monitoring source. 1 0 1 1 0: Select **PCH_DIM0_TEMP** as SYSFAN monitoring source. 1 0 1 1 1: Select **PCH_DIM1_TEMP** as SYSFAN monitoring source. 1 1 0 0 0: Select **PCH_DIM2_TEMP** as SYSFAN monitoring source. 1 1 0 0 1: Select **PCH_DIM3_TEMP** as SYSFAN monitoring source. 1 1 0 1 0: Select **BYTE_TEMP** as SYSFAN monitoring source.

9.282 Reserved Register – Index 23~39h (Bank 6)

9.283 (SYSFANIN) Fan Count Limit High-byte Register – Index 3Ah (Bank 6)

Attribute: Read /Write
Size: 8 bits

BIT	7	6	5	4	3	2	1	0
NAME	FANIN1_HL [12:5]							
DEFAULT	0	0	0	0	0	0	0	0

BIT	DESCRIPTION
7-0	**FANIN1_HL:** 13-bit SYSFANIN Fan Count Limit, High Byte

9.284 (SYSFANIN) Fan Count Limit Low-byte Register – Index 3Bh (Bank 6)

Attribute: Read /Write
Size: 8 bits

BIT	7	6	5	4	3	2	1	0
NAME	RESERVED			FANIN1_HL [4:0]				
DEFAULT	0			0				

BIT	DESCRIPTION
7-5	**Reserved.**
4-0	**FANIN1_HL:** 13-bit SYSFANIN Fan Count Limit, Low Byte

9.285 (CPUFANIN) Fan Count Limit High-byte Register – Index 3Ch (Bank 6)

Attribute: Read /Write
Size: 8 bits

BIT	7	6	5	4	3	2	1	0
NAME	FANIN2_HL [12:5]							
DEFAULT	0	0	0	0	0	0	0	0

BIT	DESCRIPTION
7-0	**FANIN2_HL:** 13-bit CPUFANIN Fan Count Limit, High Byte

9.286 (CPUFANIN) Fan Count Limit Low-byte Register – Index 3Dh (Bank 6)

Attribute: Read /Write
Size: 8 bits

BIT	7	6	5	4	3	2	1	0
NAME	RESERVED			FANIN2_HL [4:0]				
DEFAULT	0			0				

BIT	DESCRIPTION

7-5	**Reserved.**
4-0	**FANIN2_HL:** 13-bit CPUFANIN Fan Count Limit, Low Byte

9.287 Reserved Register – Index 3Eh (Bank 6)

9.288 Reserved Register – Index 3Fh (Bank 6)

9.289 Reserved Register – Index 40h (Bank 6)

9.290 Reserved Register – Index 41h (Bank 6)

9.291 Reserved Register – Index 42h (Bank 6)

9.292 Reserved Register – Index 43h (Bank 6)

9.293 SYSFANIN Revolution Pulses Selection Register – Index 44h (Bank 6)

Attribute: Read /Write
Size: 8 bits

BIT	7	6	5	4	3	2	1	0
NAME	Reserved						HM_Rev_Pulse_Fan1_Sel	
DEFAULT	0	0	0	0	0	0	1	0

BIT	DESCRIPTION
7-2	Reserved
1-0	**SYSFANIN Revolution Pulses Selection** = 00, four pulses per revolution. = 01, one pulse per revolution. = 10, two pulses per revolution. (default) = 11, three pulses per revolution.

9.294 CPUFANIN Revolution Pulses Selection Register – Index 45h (Bank 6)

Attribute: Read /Write
Size: 8 bits

BIT	7	6	5	4	3	2	1	0
NAME	Reserved						HM_Rev_Pulse_Fan2_Sel	
DEFAULT	0	0	0	0	0	0	1	0

BIT	DESCRIPTION
7-2	Reserved
1-0	**CPUFANIN Revolution Pulses Selection** = 00, four pulses per revolution.

	= 01, one pulse per revolution. = 10, two pulses per revolution. (default) = 11, three pulses per revolution.

9.295 Reserved Register – Index 46h (Bank 6)

9.296 Reserved Register – Index 47h (Bank 6)

9.297 Reserved Register – Index 48h (Bank 6)

9.298 Reserved Register – Index 49~FFh (Bank 6)

9.299 PECI Function Control Registers – Index 01 ~ 04h (Bank 7)

9.300 PECI Enable Function Register – Index 01h (Bank 7)

Attribute: Read/Write

Size: 8 bits

BIT	7	6	5	4	3	2	1	0
NAME	PECI_En	Reserved				Is_PECI30	Manual_En	Routine_En
DEFAULT	0	0	0	1	0	1	0	0

BIT	READ / WRITE	DESCRIPTION
7	R / W	Enable PECI Function. (**PECI_En**)
6 ~ 3	R / W	Reserved
2	R / W	Enable PECI 3.0 Command function (**Is_PECI30**)
1	R / W	Enable PECI 3.0 Manual Function (**Manual_En**) (**One-shot clear**)
0	R / W	Enable PECI 3.0 Routine Function (**Routine_En**)

9.301 PECI Timing Config Register – Index 02h (Bank 7)

Attribute: Read/Write

Size: 8 bits

BIT	7	6	5	4	3	2	1	0
NAME	Reserved		TN_Extend		Adj[2:0]			PECI_DC
DEFAULT	0	0	0	0	0	0	1	0

BIT	READ / WRITE	DESCRIPTION
7 ~ 6	R / W	Reserve
5	R / W	**TN_Extend[1:0]** Adjust Transaction Rate.

BIT	READ / WRITE	DESCRIPTION
4	R / W	00_{BIN} = 1.5 MHz (Default) 01_{BIN} = 750 KHz 10_{BIN} = 375 KHz 11_{BIN} = 187.5 KHz
3	R / W	**Adj[2:0]** Compensate the effect of rising time on physical bus Default Value = 001
2	R / W	
1	R / W	
0	R / W	Adjust PECI Tbit Duty cycle selection. **(PECI_DC)** 0 = 75% Tbit high duty cycle time. (Default) 1 = 68% Tbit high duty cycle time.

9.302 PECI Agent Config Register – Index 03h (Bank 7)

Attribute: Read/Write

Size: 8 bits

BIT	7	6	5	4	3	2	1	0
NAME	Reserved		En_Agt[1:0]		Reserved		Domain1_Agt1	Domain1_Agt0
DEFAULT	0	0	0	0	0	0	0	0

BIT	READ / WRITE	DESCRIPTION
7 ~ 6	R / W	Reserved
5	R / W	**En_Agt[1:0] Enable Agent** 00 = Disable Agent. 01= Enable Agent0. 10 = Reserved. 11 = Enable Agent0 and Agent1.
4	R / W	
3 ~ 2	R / W	Reserved
1	R / W	Enable domain 1 for Agent1 0 = Agent1 without domain1 1 = Agent1 with domain 1
0	R / W	Enable domain 1 for Agent0 0 = Agent0 without domain 1 1 = Agent0 with domain 1

9.303 PECI Temperature Config Register – Index 04h (Bank 7)

Attribute: Read/Write

Size: 8 bits

BIT	7	6	5	4	3	2	1	0
NAME	Virtual_En	Reserved		Clamp	Reserved	RtDmn_Agt[1:0]		RtHigher
DEFAULT	0	0	0	0	0	0	0	0

BIT	READ / WRITE	DESCRIPTION
7	R / W	Virtual Temp Function Enable.(**Virtual_En)** When enable this function, the temperature raw data can use LPC to write raw data to CR 17_{HEX} ~ CR $1E_{HEX}$
6 ~ 5	R / W	Reserved
4	R / W	When temperature data reading is positive or less than -128, can enable this function to clamp temperature data.(**Clamp**)
3	R / W	Reserved
2	R / W	**RtDmn_Agt[1:0]** Agent 1 – Agent 0 always return the relative domain Temperature. 0 = Agent always returns the relative temperature from domain 0. 1 = Agent always returns the relative temperature from domain 1.
1	R / W	
0	R / W	Return High Temperature of doamin0 or domain1.(**RtHigher**) 0 = The temperature of each agent is returned from domain 0 or domain 1, which is controlled by (CR 04_{HEX}) 1 = Return the highest temperature in domain 0 and domain 1 of individual Agent.

9.304 PECI Command Write Date Registers – Index 05 ~ 1Eh (Bank 7)

9.305 PECI Command Address Register – Index 05h (Bank 7)

Attribute: Read/Write

Size: 8 bits

BIT	7	6	5	4	3	2	1	0
NAME	PECI Command Address							
DEFAULT	0	0	0	0	0	0	0	0

BIT	DESCRIPTION
7~0	The data would be sent to client. **Default value is 00_{HEX}.**

9.306 PECI Command Write Length Register – Index 06h (Bank 7)

Attribute: Read/Write

Size: 8 bits

BIT	7	6	5	4	3	2	1	0
NAME	PECI Command Write Length							
DEFAULT	0	0	0	0	0	0	0	0

BIT	DESCRIPTION
7~0	The data would be sent to client. **Default value is 00_{HEX}.**

9.307 PECI Command Read Length Register – Index 07h (Bank 7)

Attribute: Read/Write
Size: 8 bits

BIT	7	6	5	4	3	2	1	0
NAME	PECI Command Read Length							
DEFAULT	0	0	0	0	0	0	0	0

BIT	DESCRIPTION
7~0	The data would be sent to client. **Default value is 00_{HEX}.**

9.308 PECI Command Code Register – Index 08h (Bank 7)

Attribute: Read/Write
Size: 8 bits

BIT	7	6	5	4	3	2	1	0
NAME	PECI Command Code							
DEFAULT	0	0	0	0	0	0	0	0

BIT	DESCRIPTION
7~0	The data would be sent to client. **Default value is 00_{HEX}.**

9.309 PECI Command Tbase0 Register – Index 09h (Bank 7)

Attribute: Read/Write
Size: 8 bits

BIT	7	6	5	4	3	2	1	0
NAME	Reserved	Tbase 0						
DEFAULT	0	0	0	0	0	0	0	0

BIT	DESCRIPTION
7~0	The data would be sent to client. **Default value is 00_{HEX}.**

9.310 PECI Command Tbase1 Register – Index 0Ah (Bank 7)

Attribute: Read/Write
Size: 8 bits

BIT	7	6	5	4	3	2	1	0
NAME	Reserved	Tbase 1						
DEFAULT	0	0	0	0	0	0	0	0

BIT	DESCRIPTION
7~0	The data would be sent to client. **Default value is 00_{HEX}.**

9.311 PECI Command Write Data 1 Register – Index 0Bh (Bank 7)

Attribute: Read/Write

Size: 8 bits

BIT	7	6	5	4	3	2	1	0
NAME	PECI Write Data 1							
DEFAULT	0	0	0	0	0	0	0	0

BIT	DESCRIPTION
7~0	The data would be sent to client. **Default value is 00_{HEX}.**

9.312 PECI Command Write Data 2 Register – Index 0Ch (Bank 7)

Attribute: Read/Write

Size: 8 bits

BIT	7	6	5	4	3	2	1	0
NAME	PECI Write Data 2							
DEFAULT	0	0	0	0	0	0	0	0

BIT	DESCRIPTION
7~0	The data would be sent to client. **Default value is 00_{HEX}.**

9.313 PECI Command Write Data 3 Register – Index 0Dh (Bank 7)

Attribute: Read/Write

Size: 8 bits

BIT	7	6	5	4	3	2	1	0
NAME	PECI Write Data 3							
DEFAULT	0	0	0	0	0	0	0	0

BIT	DESCRIPTION
7~0	The data would be sent to client. **Default value is 00_{HEX}.**

9.314 PECI Command Write Data 4 Register – Index 0Eh (Bank 7)

Attribute: Read/Write

Size: 8 bits

BIT	7	6	5	4	3	2	1	0
NAME	PECI Write Data 4							
DEFAULT	0	0	0	0	0	0	0	0

BIT	DESCRIPTION
7~0	The data would be sent to client. **Default value is 00_{HEX}.**

9.315 PECI Command Write Data 5 Register – Index 0Fh (Bank 7)

Attribute: Read/Write

Size: 8 bits

BIT	7	6	5	4	3	2	1	0
NAME	PECI Write Data 5							
DEFAULT	0	0	0	0	0	0	0	0

BIT	DESCRIPTION
7~0	The data would be sent to client. **Default value is 00_{HEX}.**

9.316 PECI Command Write Data 6 Register – Index 10h (Bank 7)

Attribute: Read/Write

Size: 8 bits

BIT	7	6	5	4	3	2	1	0
NAME	PECI Write Data 6							
DEFAULT	0	0	0	0	0	0	0	0

BIT	DESCRIPTION
7~0	The data would be sent to client. **Default value is 00_{HEX}.**

9.317 PECI Command Write Data 7 Register – Index 11h (Bank 7)

Attribute: Read/Write

Size: 8 bits

BIT	7	6	5	4	3	2	1	0
NAME	PECI Write Data 7							
DEFAULT	0	0	0	0	0	0	0	0

BIT	DESCRIPTION
7~0	The data would be sent to client. **Default value is 00_{HEX}.**

9.318 PECI Command Write Data 8 Register – Index 12h (Bank 7)

Attribute: Read/Write

Size: 8 bits

BIT	7	6	5	4	3	2	1	0
NAME	PECI Write Data 8							
DEFAULT	0	0	0	0	0	0	0	0

BIT	DESCRIPTION
7~0	The data would be sent to client. **Default value is 00_{HEX}.**

9.319 PECI Command Write Data 9 Register – Index 13h (Bank 7)

Attribute: Read/Write
Size: 8 bits

BIT	7	6	5	4	3	2	1	0
NAME	PECI Write Data 9							
DEFAULT	0	0	0	0	0	0	0	0

BIT	DESCRIPTION
7~0	The data would be sent to client. **Default value is 00_{HEX}.**

9.320 PECI Command Write Data 10 Register – Index 14h (Bank 7)

Attribute: Read/Write
Size: 8 bits

BIT	7	6	5	4	3	2	1	0
NAME	PECI Write Data 10							
DEFAULT	0	0	0	0	0	0	0	0

BIT	DESCRIPTION
7~0	The data would be sent to client. **Default value is 00_{HEX}.**

9.321 PECI Command Write Data 11 Register – Index 15h (Bank 7)

Attribute: Read/Write
Size: 8 bits

BIT	7	6	5	4	3	2	1	0
NAME	PECI Write Data 11							
DEFAULT	0	0	0	0	0	0	0	0

BIT	DESCRIPTION
7~0	The data would be sent to client. **Default value is 00_{HEX}.**

9.322 PECI Command Write Data 12 Register – Index 16h (Bank 7)

Attribute: Read/Write

Size: 8 bits

BIT	7	6	5	4	3	2	1	0
NAME	PECI Write Data 12							
DEFAULT	0	0	0	0	0	0	0	0

BIT	DESCRIPTION
7~0	The data would be sent to client. **Default value is 00_{HEX}.**

9.323 PECI Agent Relative Temperature Register (ARTR) – Index 17h-1Eh (Bank 7)

These registers return the **"raw data"** retrieved from PECI GetTemp() command. These data could be the error codes (range: 8000H~81FFH) or relative temperatures to process the defined Tbase. The error code will only be update in **ARTR**; while "Temperature Reading Register", Bank7 Index 20h and 21h, will not be updated when the error code is received. If the **RtHigher** mechanism is activated, the normal temperature will always be returned first. In case both 2 domains return errors, the return priority will be Overflow Error > Underflow Error > Missing Diode > General Error. The reset value is $8001_{HEX,}$ in that PECI is defaulted to be off. In PECI, 8001_{HEX} means the diode is missing.

Attribute: Read / Write(When Virtual_En enable)

ADDRESS 17-1E	DESCRIPTION
17h[15:8],18h[7:0]	Domain0 Relative Temperature Agent0 [15:0]
19h[15:8],1Ah[7:0]	Domain1 Relative Temperature Agent0 [15:0]
1Bh[15:8],1Ch[7:0]	Domain0 Relative Temperature Agent1 [15:0]
1Dh[15:8],1Eh[7:0]	Domain1 Relative Temperature Agent1 [15:0]

<u>GetTemp() PECI Temperature format:</u>

BIT	DESCRIPTION
15	Sign Bit. **(Sign)** In PECI Protocol, this bit should always be 1 to represent a negative temperature.
14-6	The integer part of the relative temperature. (**Temperature[8:0]**)
5	**TEMP_2**. 0.5℃ unit.
4	**TEMP_4**. 0.25℃ unit.
3	**TEMP_8**. 0.125℃ unit.
2	**TEMP_16**. 0.0625℃ unit.
1	**TEMP_32**. 0.03125℃ unit.
0	**TEMP_64**. 0.015625℃ unit.

GetTemp() Response Definition:

RESPONSE	MEANING
General Sensor Error (GSE)	Thermal scan did not complete in time. Retry is appropriate.
0x0000	Processor is running at its maximum temperature or is currently being reset.
All other data	Valid temperature reading, reported as a negative offset from the TCC activation temperature. The valide temperature reading is referred to GetTemp() PECI Temperature format

Error Code	Description	Host operation
8000_{HEX}	General Sensor Error	No further processing.
8001_{HEX}	Sensing Device Missing	
8002_{HEX}	Operational, but the temperature is lower than the sensor operation range.	Compulsorily write 0℃ back to the temperature readouts.
8003_{HEX}	Operational, but the temperature is higher than the sensor operation range.	Compulsorily write 127℃ back to the temperature readouts.
8004_{HEX} ' $81FF_{HEX}$	Reserved.	No further operation.

9.324 PECI Command Read Date Registers – Index 1F ~ 32h (Bank 7)

9.325 PECI Alive Agent Register – Index 1Fh (Bank 7)

Attribute: Read only

Size: 8 bits

Record which agentis able to respond to Ping().**Default value is 00_{HEX}.**

1: agent is able to respond to Ping() command. Agent alive

0: agent isn't able to respond to Ping() command. Agent is not alive

BIT	7	6	5	4	3	2	1	0
NAME	Reserved						PECI Alive Agent	
DEFAULT	0	0	0	0	0	0	0	0

BIT	DESCRIPTION
7~2	Reserve
1	1: agent1 is able to respond to Ping() command. Agent alive 0: agent1 isn't able to respond to Ping() command. Agent is not alive

BIT	DESCRIPTION
0	1: agent0 is able to respond to Ping() command. Agent alive 0: agent0 isn't able to respond to Ping() command. Agent is not alive

9.326 PECI Temperature Reading Register (Integer) – Index 20h (Bank 7)

Attribute: Read only

Size: 8 bits

BIT	7	6	5	4	3	2	1	0
NAME	PECI Temperature Reading---Integer [9:2]							
DEFAULT	0	0	1	0	1	0	0	0

BIT	DESCRIPTION
7~0	**Temperature value [9] (Sign bit)** **Temperature value [8:2] (Integer bits)** Temperature value [1:0] (Fraction bits)

Note. Temperature reading register is count from raw data and Tbase, for example:

Raw data	+	*Tbase*	=	*Temp Reading*
Bank7, Index [17][18]	**+**	**Bank7, Index [09]**	**=**	**Bank7, Index [20][21]**

9.327 PECI Temperature Reading Register (Fraction) – Index 21h (Bank 7)

Attribute: Read only

Size: 8 bits

BIT	7	6	5	4	3	2	1	0
NAME	Reserved						PECI Temperature Vaule[1:0]	
DEFAULT	0	0	0	0	0	0	0	0

BIT	DESCRIPTION
7~0	Temperature value [9] (Sign bit) Temperature value [8:2] (Integer bits) **Temperature value [1:0] (Fraction bits)**

9.328 PECI Command TN Count Value Register – Index 22h (Bank 7)

Attribute: Read only

Size: 8 bits

BIT	7	6	5	4	3	2	1	0
NAME	PECI Timing Negotiation count Value[7:0]							

DEFAULT	0	0	0	0	0	0	0	0

BIT	DESCRIPTION
7~0	The data would be get from client. **Default value is 00_{HEX}.**

9.329 PECI Command TN Count Value Register – Index 23h (Bank 7)

Attribute: Read only

Size: 8 bits

BIT	7	6	5	4	3	2	1	0
NAME	**Reserved**				**PECI Timing Negotiation count Value[11:8]**			
DEFAULT	0	0	0	0	0	0	0	0

BIT	DESCRIPTION
7~0	The data would be get from client. **Default value is 00_{HEX}.**

9.330 PECI Command Warning Flag Register – Index 24h (Bank 7)

Attribute: Read only

Size: 8 bits

BIT	7	6	5	4	3	2	1	0
NAME	**Reserved**						**Alert Value[1:0]**	
DEFAULT	0	0	0	0	0	0	0	0

BIT	DESCRIPTION
1~0	**Agent Alert Bit** (Default value is 0) 0: Agent has valid FCS. 1: Agent has invalid FCS in the previous 3 transactions. **Default value is 00_{HEX}.**

9.331 PECI Command FCS Data Register – Index 25h (Bank 7)

Attribute: Read only

Size: 8 bits

BIT	7	6	5	4	3	2	1	0
NAME	**Reserve**		**Wraning**	**CC_Fail**	**ZeroWFCS**	**AbortWFCS**	**BadRFCS**	**BadWFCS**
DEFAULT	0	0	0	0	0	0	0	0

BIT	DESCRIPTION
5~0	Retrieve PECI related data from client and host. **Default value is 00_{HEX}.**

9.332 PECI Command WFCS Data Register – Index 26h (Bank 7)

Attribute: Read only

Size: 8 bits

BIT	7	6	5	4	3	2	1	0
NAME	PECI WFCS							
DEFAULT	0	0	0	0	0	0	0	0

BIT	DESCRIPTION
7~0	Retrieve PECI WFCS related data from client. **Default value is 00_{HEX}.**

9.333 PECI RFCS Data Register – Index 27h (Bank 7)

Attribute: Read only

Size: 8 bits

BIT	7	6	5	4	3	2	1	0
NAME	PECI RFCS							
DEFAULT	0	0	0	0	0	0	0	0

BIT	DESCRIPTION
7~0	Retrieve PECI related data from client. **Default value is 00_{HEX}.**

9.334 PECI AWFCS Data Register – Index 28h (Bank 7)

Attribute: Read only

Size: 8 bits

BIT	7	6	5	4	3	2	1	0
NAME	PECI AWFCS							
DEFAULT	0	0	0	0	0	0	0	0

BIT	DESCRIPTION
7~0	Retrieve PCI related data from client. **Default value is 00_{HEX}.**

9.335 PECI CRC OUT WFCS Data Register – Index 29h (Bank 7)

Attribute: Read only

Size: 8 bits

BIT	7	6	5	4	3	2	1	0
NAME	PECI CRC OUT WFCS							
DEFAULT	0	0	0	0	0	0	0	0

BIT	DESCRIPTION
7~0	Retrieve PECI related data from client. **Default value is 00_{HEX}.**

9.336 PECI Command Read Data 1 Register – Index 2Ah (Bank 7)

Attribute: Read only

Size: 8 bits

BIT	7	6	5	4	3	2	1	0
NAME	PECI Read Data 1							
DEFAULT	0	0	0	0	0	0	0	0

BIT	DESCRIPTION
7~0	The data would be get from client. **Default value is 00_{HEX}.**

9.337 PECI Command Read Data 2 Register – Index 2Bh (Bank 7)

Attribute: Read only

Size: 8 bits

BIT	7	6	5	4	3	2	1	0
NAME	PECI Read Data 2							
DEFAULT	0	0	0	0	0	0	0	0

BIT	DESCRIPTION
7~0	The data would be get from client. **Default value is 00_{HEX}.**

9.338 PECI Command Read Data 3 Register – Index 2Ch (Bank 7)

Attribute: Read only

Size: 8 bits

BIT	7	6	5	4	3	2	1	0

NAME	PECI Read Data 3							
DEFAULT	0	0	0	0	0	0	0	0

BIT	DESCRIPTION
7~0	The data would be get from client. **Default value is 00_{HEX}.**

9.339 PECI Command Read Data 4 Register – Index 2Dh (Bank 7)

Attribute: Read only

Size: 8 bits

BIT	7	6	5	4	3	2	1	0
NAME	PECI Read Data 4							
DEFAULT	0	0	0	0	0	0	0	0

BIT	DESCRIPTION
7~0	The data would be get from client. **Default value is 00_{HEX}.**

9.340 PECI Command Read Data 5 Register – Index 2Eh (Bank 7)

Attribute: Read only

Size: 8 bits

BIT	7	6	5	4	3	2	1	0
NAME	PECI Read Data 5							
DEFAULT	0	0	0	0	0	0	0	0

BIT	DESCRIPTION
7~0	The data would be get from client. **Default value is 00_{HEX}.**

9.341 PECI Command Read Data 6 Register – Index 2Fh (Bank 7)

Attribute: Read only

Size: 8 bits

BIT	7	6	5	4	3	2	1	0
NAME	PECI Read Data 6							
DEFAULT	0	0	0	0	0	0	0	0

BIT	DESCRIPTION

BIT	DESCRIPTION
7~0	The data would be get from client. **Default value is 00_{HEX}.**

9.342 PECI Command Read Data 7 Register – Index 30h (Bank 7)

Attribute: Read only

Size: 8 bits

BIT	7	6	5	4	3	2	1	0
NAME	PECI Read Data 7							
DEFAULT	0	0	0	0	0	0	0	0

BIT	DESCRIPTION
7~0	The data would be get from client. **Default value is 00_{HEX}.**

9.343 PECI Command Read Data 8 Register – Index 31h (Bank 7)

Attribute: Read only

Size: 8 bits

BIT	7	6	5	4	3	2	1	0
NAME	PECI Read Data 8							
DEFAULT	0	0	0	0	0	0	0	0

BIT	DESCRIPTION
7~0	The data would be get from client. **Default value is 00_{HEX}.**

9.344 PECI Command Read Data 9 Register – Index 32h (Bank 7)

Attribute: Read only

Size: 8 bits

BIT	7	6	5	4	3	2	1	0
NAME	PECI Read Data 9							
DEFAULT	0	0	0	0	0	0	0	0

BIT	DESCRIPTION
7~0	The data would be get from client. **Default value is 00_{HEX}.**

PECI Manual Command Address Table

Command Bank 7	Address CR 05_{HEX}	WriteLength CR 06_{HEX}	Read Length CR 07_{HEX}	Command Code CR 08_{HEX}

Ping	**Addr**	**00**	**00**	
GetDIB		**01**	**08**	**F7**
GetTemp		**01**	**02**	**01**
PCIRd30		**06**	**02 / 03 / 05**	**61**
PCIWr30		**08 / 09 / 0B**	**01**	**65**
PCIRdLocal30		**05**	**02 / 03 / 05**	**E1**
PCIWrLocal30		**07 / 08 / 0A**	**01**	**E5**
PKGRd30		**05**	**02 / 03 / 05**	**A1**
PKGWr30		**07 / 08 / 0A**	**01**	**A5**
IAMSRRd30		**05**	**02 / 03 / 05 / 09**	**B1**
IAMSRWr30		**07 / 08 / 0A / 0E**	**01**	**B5**

PECI Manual Command Read Data Table

Command	**PCI Rd30**	**PCI Wr30**	**PCIRd Local30**	**PCIWr Local30**	**PKG Rd30**	**PKG Wr30**	**IAMSR Rd30**	**IAMSR Wr30**	**GetDIB**	**GetTemp**
Command Code	**61**	**65**	**E1**	**E5**	**A1**	**A5**	**B1**	**B5**	**F7**	**01**
RdData 1 CR 2A$_{HEX}$	Ccode	Ccode	Ccode	Ccode	Ccode	Ccode	Ccode	Ccode	X	X
RdData 2 CR 2B$_{HEX}$	X	X	X	X	X	X	Data LSB_1	X	Device Info	X
RdData 3 CR 2C$_{HEX}$	X	X	X	X	X	X	Data LSB_2	X	Revision Number	X
RdData 4 CR 2D$_{HEX}$	X	X	X	X	X	X	Data LSB_3	X	Reserved 1	X
RdData 5 CR 2E$_{HEX}$	X	X	x	X	X	X	Data LSB_4	X	Reserved 2	X
RdData 6 CR 2F$_{HEX}$	Data LSB_1	X	Data LSB_1	X	Data LSB_1	X	Data LSB_5	X	Reserved 3	X
RdData 7 CR 30$_{HEX}$	Data LSB_2	X	Data LSB_2	X	Data LSB_2	X	Data LSB_6	X	Reserved 4	X
RdData 8 CR 31$_{HEX}$	Data LSB_3	X	Data LSB_3	X	Data LSB_3	X	Data LSB_7	X	Reserved 5	Temp_LB
RdData 9 CR 32$_{HEX}$	Data MSB	x	Data MSB	X	Data MSB	X	Data MSB	X	Reserved 6	Temp_HB

PECI Manual Command Write Data Table

Command	PCI Rd30	PCI Wr30	PCIRd Local30	PCIWr Local30	PKG Rd30	PKG Wr30	IAMSR Rd30	IAMSR Wr30
Command Code	**61**	**65**	**E1**	**E5**	**A1**	**A5**	**B1**	**B5**
WrData 1 CR $0B_{HEX}$	Host ID	Host ID	Host ID	Host ID	Host ID	Host ID	Host ID	Host ID
WrData 2 CR $0C_{HEX}$	Addr LSB_1	Addr LSB_1	Addr LSB_1	Addr LSB_1	Index	Index	Processor ID	Processor ID
WrData 3 CR $0D_{HEX}$	Addr LSB_2	Addr LSB_2	Addr LSB_2	Addr LSB_2	Param LSB	Param LSB	Addr LSB	Addr LSB
WrData 4 CR $0E_{HEX}$	Addr LSB_3	Addr LSB_3	Addr MSB	Addr MSB	Param MSB	Param MSB	Addr MSB	Addr MSB
WrData 5 CR $0F_{HEX}$	Addr MSB	Addr MSB	X	Data LSB_1	X	Data LSB_1	X	Data LSB_1
WrData 6 CR 10_{HEX}	X	Data LSB_1	X	Data LSB_2	X	Data LSB_2	X	Data LSB_2
WrData 7 CR 11_{HEX}	X	Data LSB_2	X	Data LSB_3	X	Data LSB_3	X	Data LSB_3
WrData 8 CR 12_{HEX}	X	Data LSB_3	X	Data MSB	X	Data MSB	X	Data LSB_4
WrData 9 CR 13_{HEX}	X	Data MSB	X	X	X	X	X	Data LSB_5
WrData10 CR 14_{HEX}	X	X	X	X	X	X	X	Data LSB_6
WrData11 CR 15_{HEX}	X	X	X	X	X	X	X	Data LSB_7
WrData12 CR 16_{HEX}	X	X	X	X	X	X	X	Data MSB

9.345 Reserved Register – Index 00h (Bank 8)

9.346 Reserved Register – Index 01h (Bank 8)

9.347 Reserved Register – Index 02h (Bank 8)

9.348 Reserved Register – Index 03h (Bank 8)

9.349 Reserved Register – Index 04h (Bank 8)

9.350 Reserved Register – Index 05h (Bank 8)

9.351 Reserved Register – Index 06h (Bank 8)

9.352 Reserved Register – Index 07h (Bank 8)

9.353 Reserved Register – Index 08h (Bank 8)

9.354 Reserved Register – Index 09h (Bank 8)

9.355 Reserved Register – Index 0Ch (Bank 8)

9.356 Reserved Register – Index 0Dh (Bank 8)

9.357 Reserved Register – Index 20h (Bank 8)

9.358 Reserved Register – Index 21h (Bank 8)

9.359 Reserved Register – Index 22h (Bank 8)

9.360 Reserved Register – Index 23h (Bank 8)

9.361 Reserved Register – Index 24h (Bank 8)

9.362 Reserved Register – Index 25h~26h (Bank 8)

9.363 Reserved Register – Index 27h (Bank 8)

9.364 Reserved Register – Index 28h (Bank 8)

9.365 Reserved Register – Index 29h (Bank 8)

9.366 Reserved Register – Index 2Ah (Bank 8)

9.367 Reserved Register – Index Index 2Bh~30h (Bank 8)

9.368 Reserved Register – Index 31h (Bank 8)

9.369 Reserved Register – Index 32h~34h(Bank 8)

9.370 Reserved Register – Index 35h (Bank 8)

9.371 Reserved Register – Index 36h (Bank 8)

9.372 Reserved Register – Index 37h (Bank 8)

9.373 Reserved Register – Index 38h (Bank 8)

9.374 Reserved Register – Index 39h (Bank 8)

9.375 Reserved Register – Index 3Ah (Bank 8)

9.376 Reserved Register – Index 3Bh (Bank 8)

9.377 Reserved Register – Index 3Ch (Bank 8)

9.378 Reserved Register – Index 3Dh (Bank 8)

9.379 Reserved Register – Index 3Eh (Bank 8)

9.380 Reserved Register – Index 3Fh (Bank 8)

9.381 Reserved Register – Index 40h (Bank 8)

9.382 Reserved Register – Index 41h (Bank 8)

9.383 Reserved Register – Index 42h ~ FFh (Bank 8)

9.384 Reserved Register – Index 00h (Bank 9)

9.385 Reserved Register – Index 01h (Bank 9)

9.386 Reserved Register – Index 02h (Bank 9)

9.387 Reserved Register – Index 03h (Bank 9)

9.388 Reserved Register – Index 04h (Bank 9)

9.389 Reserved Register – Index 05h (Bank 9)

9.390 Reserved Register – Index 06h (Bank 9)

9.391 Reserved Register – Index 07h (Bank 9)

9.392 Reserved Register – Index 08h (Bank 9)

9.393 Reserved Register – Index 09h (Bank 9)

9.394 Reserved Register – Index 0Ch (Bank 9)

9.395 Reserved Register – Index 0Dh (Bank 9)

9.396 Reserved Register – Index 20h (Bank 9)

9.397 Reserved Register – Index 21h (Bank 9)

9.398 Reserved Register – Index 22h (Bank 9)

9.399 Reserved Register – Index 23h (Bank 9)

9.400 Reserved Register – Index 24h (Bank 9)

9.401 Reserved Register – Index 25h~26h (Bank 9)

9.402 Reserved Register – Index 27h (Bank 9)

9.403 Reserved Register – Index 28h (Bank 9)

9.404 Reserved Register – Index 29h (Bank 9)

9.405 Reserved Register – Index 2Ah (Bank 9)

9.406 Reserved Register – Index Index 2Bh~30h (Bank 9)

9.407 Reserved Register – Index 31h (Bank 9)

9.408 Reserved Register – Index 32h~34h(Bank 9)

9.409 Reserved Register – Index 35h (Bank 9)

9.410 Reserved Register – Index 36h (Bank 9)

9.411 Reserved Register – Index 37h (Bank 9)

9.412 Reserved Register – Index 38h (Bank 9)

9.413 Reserved Register – Index 39h (Bank 9)

9.414 Reserved Register – Index 3Ah (Bank 9)

9.415 Reserved Register – Index 3Bh (Bank 9)

9.416 Reserved Register – Index 3Ch (Bank 9)

9.417 Reserved Register – Index 3Dh (Bank 9)

9.418 Reserved Register – Index 3Eh (Bank 9)

9.419 Reserved Register – Index 3Fh (Bank 9)

9.420 Reserved Register – Index 40h (Bank 9)

9.421 Reserved Register – Index 41h (Bank 9)

9.422 Reserved Register – Index 42h ~ FFh (Bank 9)

10. UART PORT

10.1 UART Control Register (UCR) (Read/Write)

The UART Control Register defines and controls the protocol for asynchronous data communications, including data length, stop bit, parity, and baud rate selection.

BIT	7	6	5	4	3	2	1	0
NAME	BDLAB	SSE	PBFE	EPE	PBE	MSBE	DLS1	DLS0
DEFAULT	0	0	0	0	0	0	0	0

BIT	DESCRIPTION
7	**BDLAB (Baud Rate Divisor Latch Access Bit).** When this bit is set to logic 1, designers can access the divisor (in 16-bit binary format) from the divisor latches of the baud-rate generator during a read or write operation. When this bit is set to logic 0, the Receiver Buffer Register, the Transmitter Buffer Register, and the Interrupt Control Register can be accessed.
6	**SSE (Set Silence Enable).** A logic 1 forces the Serial Output (SOUT) to a silent state (a logical 0). Only IRTX is affected by this bit; the transmitter is not affected.
5	**PBFE (Parity Bit Fixed Enable).** When PBE and PBFE of UCR are both set to logic 1, (1) if EPE is logic 1, the parity bit is logical 0 when transmitting and checking; (2) if EPE is logic 0, the parity bit is logical 1 when transmitting and checking.
4	**EPE (Even Parity Enable).** When PBE is set to logic 1, this bit counts the number of logic 1's in the data word bits and determines the parity bit. When this bit is set to logic 1, the parity bit is set to logic 1 if an even number of logic 1's are sent or checked. When the bit is set to logic 0, the parity bit is logic 1, if an odd number of logic 1's are sent or checked.
3	**PBE (Parity Bit Enable).** When this bit is set to logic 1, the transmitter inserts a stop bit between the last data bit and the stop bit of the SOUT, and the receiver checks the parity bit in the same position.
2	**MSBE (Multiple Stop Bit Enable).** Defines the number of stop bits in each serial character that is transmitted or received. (1) If MSBE is set to logic 0, one stop bit is sent and checked. (2) If MSBE is set to logic 1 and the data length is 5 bits, one-and-a-half stop bits are sent and checked. (3) If MSBE is set to logic 1 and the data length is 6, 7, or 8 bits, two stop bits are sent and checked.
1	**DLS1 (Data Length Select Bit 1).** Defines the number of data bits that are sent or checked in each serial character.
0	**DLS0 (Data Length Select Bit 0).** Defines the number of data bits that are sent or checked in each serial character.

DLS1	DLS0	DATA LENGTH
0	0	5 bits
0	1	6 bits
1	0	7 bits

DLS1	DLS0	DATA LENGTH
1	1	8 bits

The following table identifies the remaining UART registers. Each one is described separately in the following sections.

Table 10-1 Register Summary for UART

Bit Number										
Register Address Base			**0**	**1**	**2**	**3**	**4**	**5**	**6**	**7**
+ 0 BDLAB = 0	Receiver Buffer Register (Read Only)	RBR	RX Data Bit 0	RX Data Bit 1	RX Data Bit 2	RX Data Bit 3	RX Data Bit 4	RX Data Bit 5	RX Data Bit 6	RX Data Bit 7
+ 0 BDLAB = 0	Transmitter Buffer Register (Write Only)	TBR	TX Data Bit 0	TX Data Bit 1	TX Data Bit 2	TX Data Bit 3	TX Data Bit 4	TX Data Bit 5	TX Data Bit 6	TX Data Bit 7
+ 1 BDLAB = 0	Interrupt Control Register	ICR	RBR Data Ready Interrupt Enable (ERDRI)	TBR Empty Interrupt Enable (ETBREI)	USR Interrupt Enable (EUSRI)	HSR Interrupt Enable (EHSRI)	0	0	0	0
+ 2	Interrupt Status Register (Read Only)	ISR	"0" if Interrupt Pending	Interrupt Status Bit (0)	Interrupt Status Bit (1)	Interrupt Status Bit (2)**	0	0	FIFOs Enabled **	FIFOs Enabled **
+ 2	UART FIFO Control Register (Write Only)	UFR	FIFO Enable	RCVR FIFO Reset	XMIT FIFO Reset	DMA Mode Select	Reserved	Reversed	RX Interrupt Active Level (LSB)	RX Interrupt Active Level (MSB)
+ 3	UART Control Register	UCR	Data Length Select Bit 0 (DLS0)	Data Length Select Bit 1 (DLS1)	Multiple Stop Bits Enable (MSBE)	Parity Bit Enable (PBE)	Even Parity Enable (EPE)	Parity Bit Fixed Enable PBFE)	Set Silence Enable (SSE)	Baudrate Divisor Latch Access Bit (BDLAB)
+ 4	Handshake Control Register	HCR	Data Terminal Ready (DTR)	Request to Send (RTS)	Loopback RI Input	IRQ Enable	Internal Loopback Enable	0	0	0
+ 5	UART Status Register	USR	RBR Data Ready (RDR)	Overrun Error (OER)	Parity Bit Error (PBER)	No Stop Bit Error (NSER)	Silent Byte Detected (SBD)	TBR Empty (TBRE)	TSR Empty (TSRE)	RX FIFO Error Indication (RFEI) **
+ 6	Handshake Status Register	HSR	CTS Toggling (TCTS)	DSR Toggling (TDSR)	RI Falling Edge (FERI)	DCD Toggling (TDCD)	Clear to Send (CTS)	Data Set Ready (DSR)	Ring Indicator (RI)	Data Carrier Detect (DCD)
+ 7	User Defined Register	UDR	Bit 0	Bit 1	Bit 2	Bit 3	Bit 4	Bit 5	Bit 6	Bit 7
+ 0 BDLAB = 1	Baudrate Divisor Latch Low	BLL	Bit 0	Bit 1	Bit 2	Bit 3	Bit 4	Bit 5	Bit 6	Bit 7
+ 1 BDLAB = 1	Baudrate Divisor Latch High	BHL	Bit 8	Bit 9	Bit 10	Bit 11	Bit 12	Bit 13	Bit 14	Bit 15

*: Bit 0 is the least significant bit. The least significant bit is the first bit serially transmitted or received.
**: These bits are always 0 in 16450 Mode.

10.2 UART Status Register (USR) (Read/Write)

This 8-bit register provides information about the status of data transfer during communication.

BIT	7	6	5	4	3	2	1	0
NAME	RF EI	TSRE	TBRE	SBD	NSER	PBER	OER	RDR
DEFAULT	0	1	1	0	0	0	0	0

BIT	DESCRIPTION
7	**RF EI (RX FIFO Error Indication).** In 16450 mode, this bit is always set to logical 0. in 16550 mode, this bit is set to logical 1 when there is at least one parity-bit error and no stop0bit error or silent-byte detected in the FIFO. In 16550 mode, this bit is cleared to logical 0 by reading from the USR if there are no remaining errors left in the FIFO.
6	**TSRE (Transmitter Shift Register Empty).** In 16450 mode, this bit is set to logical 1 when TBR and TSR are both empty. In 16550 mode, it is set to logical 1 when the transmit FIFO and TSR are both empty. Otherwise, this bit is set to logical 0.
5	**TBRE (Transmitter Buffer Register Empty).** In 16450 mode, when a data character is transferred from TBR to TSR, this bit is set to logical 1. If ETREI of ICR is high, and interrupt is generated to notify the CPU to write next data. In 16550 mode, this bit is set to logical 1 when the transmit FIFO is empty. It is set to logical 0 when the CPU writes data into TBR or the FIFO.
4	**SBD (Silent Byte Detected).** This bit is set to logical 1 to indicate that received data are kept in silent state for the time it takes to receive a full word, which includes the start bit, data bits, parity bit, and stop bits. In 16550 mode, it indicates the same condition for the data on the top of the FIFO. When the CPU reads USR, it sets this bit to logical 0.
3	**NSER (No Stop Bit Error).** This bit is set to logical 1 to indicate that the received data have no stop bit. In 16550 mode, it indicates the same condition for the data on the top of the FIFO. When the CPU reads USR, it sets this bit to logical 0.
2	**PBER (Parity Bit Error).** This bit is set to logical 1 to indicate that the received data has the wrong parity bit. In 16550 mode, it indicates the same condition for the data on the top of the FIFO. When the CPU reads USR, it sets this bit to logical 0.
1	**OER (Overrun Error).** This bit is set to logical 1 to indicate that the received data have been overwritten by the next received data before they were read by the CPU. In 16550 mode, it indicates the same condition, instead of FIFO full. When the CPU reads USR, it sets this bit to logical 0.
0	**RDR (RBR Data Ready).** This bit is set to logical 1 to indicate that the received data are ready to be read by the CPU in the RBR or FIFO. When no data are left in the RBR or FIFO, the bit is set to logical 0.

10.3 Handshake Control Register (HCR) (Read/Write)

This register controls pins used with handshaking peripherals such as modems and also controls the diagnostic mode of the UART.

BIT	7	6	5	4	3	2	1	0
NAME	RESERVED			INTERNAL LOOPBACK ENABLE	IRQ ENABLE	LOOPBACK RI INPUT	RTS	DTR
DEFAULT	0	0	0	0	0	0	0	0

BIT	DESCRIPTION
7-5	**Reserved.**
4	**Internal Loopback Enable.** When this bit is set to logic 1, the UART enters diagnostic mode, as follows: (1) SOUT is forced to logic 1, and SIN is isolated from the communication link. (2) The modem output pins are set to their inactive state. (3) The modem input pins are isolated from the communication link and connect internally as DTR (bit 0 of HCR) →DSR#, RTS (bit 1 of HCR) →CTS#, Loopback RI input (bit 2 of HCR) → RI# and IRQ enable (bit 3 of HCR) →DCD#. Aside from the above connections, the UART operates normally. This method allows the CPU to test the UART in a convenient way.
3	**IRQ Enable.** The UART interrupt output is enabled by setting this bit to logic 1. In diagnostic mode, this bit is internally connected to the modem control input DCD#.
2	**Loopback RI Input.** This bit is only used in the diagnostic mode. In diagnostic mode, this bit is internally connected to the modem control input RI#.
1	**RTS (Request to Send).** This bit controls the RTS# output. The value of this bit is inverted and output to RTS#.
0	**DTR (Data Terminal Ready).** This bit controls the DTR# output. The value of this bit is inverted and output to DTR#.

10.4 Handshake Status Register (HSR) (Read/Write)

This register reflects the current state of four input pins used with handshake peripherals such as modems and records changes on these pins.

BIT	7	6	5	4	3	2	1	0
NAME	DCD	RI	DSR	CTS	TDCD	FERI	TDSR	TCTS
DEFAULT	NA	NA	NA	NA	NA	NA	NA	NA

BIT	DESCRIPTION
7	**DCD (Data Carrier Detect).** This bit is the inverse of the DCD# input and is equivalent to bit 3 of HCR in Loopback mode.
6	**RI (Ring Indicator).** This bit is the inverse of the RI# input and is equivalent to bit 2 of HCR in Loopback mode.
5	**DSR (Data Set Ready).** This bit is the inverse of the DSR# input and is equivalent to bit 0 of HCR in Loopback mode.
4	**CTS (Clear to Send).** This bit is the inverse of the CTS# input and is equivalent to bit 1 of HCR in Loopback mode.
3	**TDCD (DCD# Toggling).** This bit indicates that the state of the DCD# pin has changed after HSR is read by the CPU.
2	**FERI (RI Falling Edge).** This bit indicates that the RI# pin has changed from low to high after HSR is read by the CPU.
1	**TDSR (DSR# Toggling).** This bit indicates that the state of the DSR# pin has changed after HSR is read by the CPU.
0	**TCTS (CTS# Toggling).** This bit indicates that the state of the CTS# pin has changed after HSR is read by the CPU.

10.5 UART FIFO Control Register (UFR) (Write only)

This register is used to control the FIFO functions of the UART.

BIT	7	6	5	4	3	2	1	0
NAME	MSB	LSB	RESERVED		DMA MODE SELECT	TRANSMITTER FIFO RESET	RECEIVER FIFO RESET	FIFO ENABLE
DEFAULT	0	0	NA	NA	0	0	0	0

BIT	DESCRIPTION	
7	**MSB (RX Interrupt Active Level).**	These two bits are used to set the active level of the receiver FIFO interrupt. The active level is the number of bytes that must be in the receiver FIFO to generate an interrupt.
6	**LSB (RX Interrupt Active Level).**	
5-4	**RESERVED.**	
3	**DMS MODE SELECT.** When this bit is set to logic 1, DMA mode changes from mode 0 to mode 1 if UFR bit 0 = 1.	
2	**TRANSMITTER FIFO RESET.** Setting this bit to logic 1 resets the TX FIFO counter logic to its initial state. This bit is automatically cleared afterwards.	
1	**RECEIVER FIFO RESET.** Setting this bit to logic 1 resets the RX FIFO counter logic to its initial state. This bit is automatically cleared afterwards.	
0	**FIFO ENABLE.** This bit enables 16550 (FIFO) mode. This bit should be set to logic 1 before other UFR bits are programmed.	

BIT 7	BIT 6	RX FIFO INTERRUPT ACTIVE LEVEL (BYTES)
0	0	01
0	1	04
1	0	08
1	1	14

10.6 Interrupt Status Register (ISR) (Read only)

This register reflects the UART interrupt status.

BIT	7	6	5	4	3	2	1	0
NAME	FIFOS ENABLED		RESERVED		INTERRUPT STATUS BIT 2	INTERRUPT STATUS BIT 1	INTERRUPT STATUS BIT 0	0 IF INTERRUPT PENDING
DEFAULT	0	0	0	0	0	0	0	1

BIT	DESCRIPTION
7-6	**FIFOS ENABLED.** Set to logical 1 when UFR, bit 0 = 1.
5-4	**RESERVED.**
3	**INTERRUPT STATUS BIT 2.** In 16450 mode, this bit is logical 0. In 16550 mode, bits 3 and 2 are set to logical 1 when a time-out interrupt is pending. Please see the table below.

2	**INTERRUPT STATUS BIT 1.**	These two bits identify the priority level of the pending interrupt, as shown in the table below.
1	**INTERRUPT STATUS BIT 0.**	
0	**0 IF INTERRUPT PENDING.** This bit is logic 1 if there is no interrupt pending. If one of the interrupt sources has occurred, this bit is set to logical 0.	

ISR				INTERRUPT SET AND FUNCTION			
Bit 3	Bit 2	Bit 1	Bit 0	Interrupt priority	Interrupt Type	Interrupt Source	Clear Interrupt
0	0	0	1	-	-	No Interrupt pending	-
0	1	1	0	First	UART Receive Status	1. OER = 1 2. PBER =1 3. NSER = 1 4. SBD = 1	Read USR
0	1	0	0	Second	RBR Data Ready	1. RBR data ready 2. FIFO interrupt active level reached	1. Read RBR 2. Read RBR until FIFO data under active level
1	1	0	0	Second	FIFO Data Timeout	Data present in RX FIFO for 4 characters period of time since last access of RX FIFO.	Read RBR
0	0	1	0	Third	TBR Empty	TBR empty	1. Write data into TBR 2. Read ISR (if priority is third)
0	0	0	0	Fourth	Handshake status	1. TCTS = 1 2. TDSR = 1 3. FERI = 1 4. TDCD = 1	Read HSR

** Bit 3 of ISR is enabled when bit 0 of UFR is logical 1.

10.7 Interrupt Control Register (ICR) (Read/Write)

This 8-bit register enables and disables the five types of controller interrupts separately. A selected interrupt can be enabled by setting the appropriate bit to logical 1. The interrupt system can be totally disabled by setting bits 0 through 3 to logical 0.

BIT	7	6	5	4	3	2	1	0
NAME	En_address_byte	RX_ctrl	RESERVED		EHSRI	EUSRI	ETBREI	ERDRI
DEFAULT	0	0	0	0	0	0	0	0

BIT	DESCRIPTION
7	**En_address_byte.** 0: Tx block will send data byte. (If enable 9bit mode function CRF2 Bit0=1) 1: Tx block will send address byte. (If enable 9bit mode function CRF2 Bit0=1)
6	**RX_ctrl.** 0: Rx block could receive data byte. (If enable 9bit mode function CRF2 Bit0=1) 1: Rx block could receive address byte. (If enable 9bit mode function CRF2 Bit0=1)
5-4	**RESERVED.**
3	**EHSRI (Handshake Status Interrupt Enable).** Set this bit to logical 1 to enable the handshake status register interrupt.
2	**EUSRI (UART Receive Status Interrupt Enable).** Set this bit to logical 1 to enable the UART status register interrupt.
1	**ETBREI (TBR Empty Interrupt Enable).** Set this bit to logical 1 to enable the TBR empty

BIT	DESCRIPTION
	interrupt.
0	**ERDRI (RBR Data Ready Interrupt Enable).** Set this bit to logical 1 to enable the RBR data ready interrupt.

10.8 Programmable Baud Generator (BLL/BHL) (Read/Write)

Two 8-bit registers, BLL and BHL, compose a programmable baud generator that uses 24 MHz to generate a 1.8461 MHz frequency and divide it by a divisor from 1 to (2^{16} –1). The output frequency of the baud generator is the baud rate multiplied by 16, and this is the base frequency for the transmitter and receiver. The table below illustrates the use of the baud generator with a frequency of 1.8461 MHz. In high-speed UART mode (CR0C, bits 7 and 6), the programmable baud generator directly uses 24 MHz and the same divisor as the normal speed divisor. As a result, in high-speed mode, the data transmission rate can be as high as 1.5M bps.

BAUD RATE FROM DIFFERENT PRE-DIVIDER				
PRE-DIV: 13 1.8461M HZ	**PRE-DIV:1.625 14.769M HZ**	**PRE-DIV: 1.0 24M HZ**	**DECIMAL DIVISOR USED TO GENERATE 16X CLOCK**	**ERROR PERCENTAGE**
50	400	650	2304	**
75	600	975	1536	**
110	880	1430	1047	0.18%
134.5	1076	1478.5	857	0.099%
150	1200	1950	768	**
300	2400	3900	384	**
600	4800	7800	192	**
1200	9600	15600	96	**
1800	14400	23400	64	**
2000	16000	26000	58	0.53%
2400	19200	31200	48	**
3600	28800	46800	32	**
4800	38400	62400	24	**
7200	57600	93600	16	**
9600	76800	124800	12	**
19200	153600	249600	6	**
38400	307200	499200	3	**
57600	460800	748800	2	**
115200	921600	1497600	1	**

** Unless specified, the error percentage for all of the baud rates is 0.16%.

Note: Pre-Divisor is determined by CRF0 of UART A and B.

10.9 User-defined Register (UDR) (Read/Write)

This is a temporary register that can be accessed and defined by the user.

10.10 UART RS485 Auto Flow Control

NCT5532D supports RS485 auto flow control function for UARTA. When enabling the RS485 auto control function, it will automatically drive RTS# pin to logic high or low for UARTA when UART TX block transmits the data.

The diagram shown below illustrates the RS485 auto flow control function for UARTA.

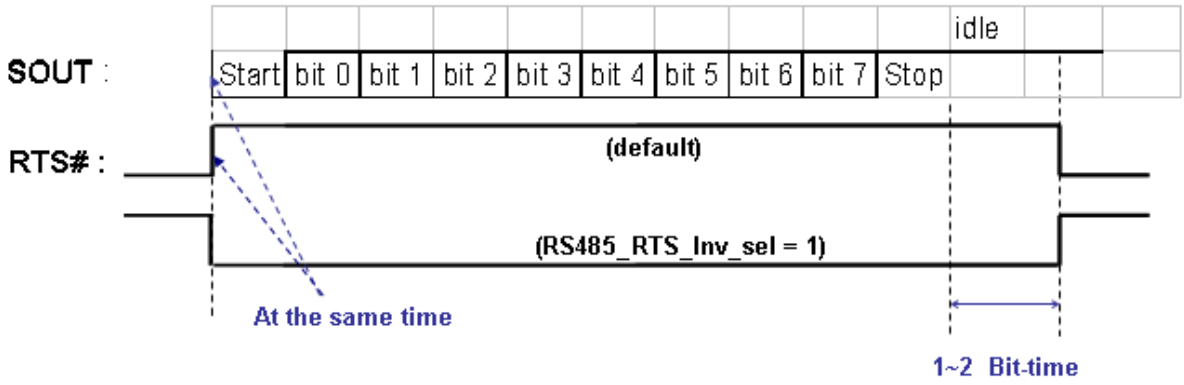

The default behavior of RTS# pin will drive logic high the time edge between **Start bit** and **bit0** when the UART TX Block start to transmits the data on SOUT pin. Then the RTS# pin will drive logic low later than **Stop bit** about 1~2 x Bit-time when UART TX Block completes the data transmission. The driving behavior of RTS# will be inverted when we set RS485_RTS_inv_sel bit = 1'b1. (Bit-time: Depends on the baud rate of transmission)

The bellowing control register table relates to the RS485 auto flow control function for UARTA.

	UARTA
RTS485_enable	Logic Device 2, CRF2_Bit7
RTS485_inv_sel	Logic Device 2, CRF2_Bit6

11. KEYBOARD CONTROLLER

The NCT5532D KBC (8042 with licensed KB BIOS) circuit is designed to provide the functions needed to interface a CPU with a keyboard and/or a PS/2 mouse and can be used with IBM®-compatible personal computers or PS/2-based systems. The controller receives serial data from the keyboard or PS/2 mouse, checks the parity of the data, and presents the data to the system as a byte of data in its output buffer. Then, the controller asserts an interrupt to the system when data are placed in its output buffer. The keyboard and PS/2 mouse are required to acknowledge all data transmissions. No transmission should be sent to the keyboard or PS/2 mouse until an acknowledgement is received for the previous data byte.

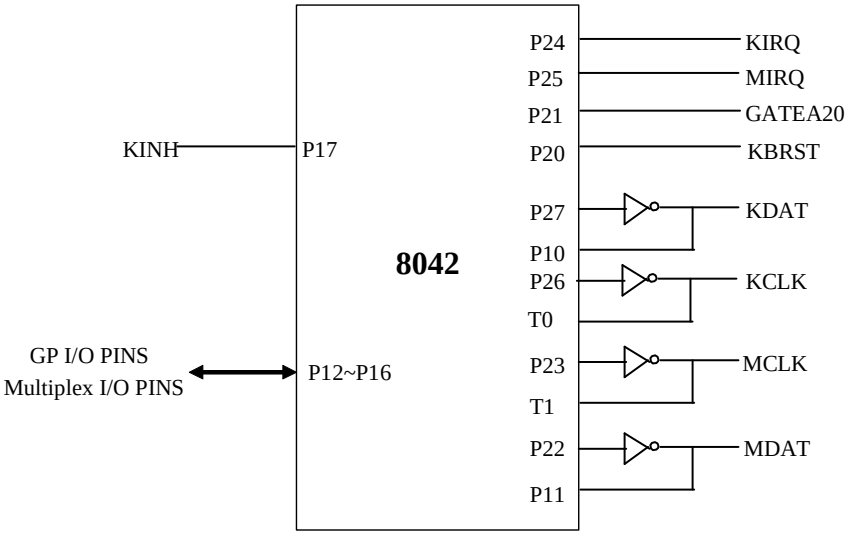

Figure 11-1 Keyboard and Mouse Interface

11.1 Output Buffer

The output buffer is an 8-bit, read-only register at I/O address 60H (Default, PnP programmable I/O address LD5-CR60 and LD5-CR61). The keyboard controller uses the output buffer to send the scan code (from the keyboard) and required command bytes to the system. The output buffer can only be read when the output buffer full bit in the register (in the status register) is logical 1.

11.2 Input Buffer

The input buffer is an 8-bit, write-only register at I/O address 60h or 64h (Default, PnP programmable I/O address LD5-CR60, LD5-CR61, LD5-CR62, and LD5-CR63). Writing to address 60h sets a flag to indicate a data write; writing to address 64h sets a flag to indicate a command write. Data written to I/O address 60h is sent to the keyboard (unless the keyboard controller is expecting a data byte) through the controller's input buffer only if the input buffer full bit (in the status register) is logical 0.

11.3 Status Register

The status register is an 8-bit, read-only register at I/O address 64h (Default, PnP programmable I/O address LD5-CR62 and LD5-CR63) that holds information about the status of the keyboard controller and interface. It may be read at any time.

Table 11-1 Bit Map of Status Register

BIT	BUT FUNCTION	DESCRIPTION
0	Output Buffer Full	0: Output buffer empty 1: Output buffer full
1	Input Buffer Full	0: Input buffer empty 1: Input buffer full
2	System Flag	This bit may be set to 0 or 1 by writing to the system flag bit in the command byte of the keyboard controller. It defaults to 0 after a power-on reset.
3	Command/Data	0: Data byte 1: Command byte
4	Inhibit Switch	0: Keyboard is inhibited 1: Keyboard is not inhibited
5	Auxiliary Device Output Buffer	0: Auxiliary device output buffer empty 1: Auxiliary device output buffer full
6	General Purpose Time-out	0: No time-out error 1: Time-out error
7	Parity Error	0: Odd parity 1: Even parity (error)

11.4 Commands

Table 11-2 KBC Command Sets

<table>
<tr><th>COMMAND</th><th>FUNCTION</th></tr>
<tr><td>20h</td><td>Read Command Byte of Keyboard Controller</td></tr>
<tr><td>60h</td><td>Write Command Byte of Keyboard Controller
<table>
<tr><th>BIT</th><th>BIT DEFINITION</th></tr>
<tr><td>7</td><td>Reserved</td></tr>
<tr><td>6</td><td>IBM Keyboard Translate Mode</td></tr>
<tr><td>5</td><td>Disable Auxiliary Device</td></tr>
<tr><td>4</td><td>Disable Keyboard</td></tr>
<tr><td>3</td><td>Reserve</td></tr>
<tr><td>2</td><td>System Flag</td></tr>
<tr><td>1</td><td>Enable Auxiliary Interrupt</td></tr>
<tr><td>0</td><td>Enable Keyboard Interrupt</td></tr>
</table></td></tr>
<tr><td>A4h</td><td>Test Password
Returns 0Fah if Password is loaded
Returns 0F1h if Password is not loaded</td></tr>
<tr><td>A5h</td><td>Load Password
Load Password until a logical 0 is received from the system</td></tr>
<tr><td>A6h</td><td>Enable Password
Enable the checking of keystrokes for a match with the password</td></tr>
<tr><td>A7h</td><td>Disable Auxiliary Device Interface</td></tr>
<tr><td>A8h</td><td>Enable Auxiliary Device Interface</td></tr>
<tr><td>A9h</td><td>Interface Test
<table>
<tr><th>BIT</th><th>BIT DEFINITION</th></tr>
<tr><td>00</td><td>No Error Detected</td></tr>
<tr><td>01</td><td>Auxiliary Device "Clock" line is stuck low</td></tr>
<tr><td>02</td><td>Auxiliary Device "Clock" line is stuck high</td></tr>
<tr><td>03</td><td>Auxiliary Device "Data" line is stuck low</td></tr>
<tr><td>04</td><td>Auxiliary Device "Data" line is stuck low</td></tr>
</table></td></tr>
<tr><td>Aah</td><td>Self-test
Returns 055h if self-test succeeds</td></tr>
<tr><td>Abh</td><td>Interface Test
<table>
<tr><th>BIT</th><th>BIT DEFINITION</th></tr>
<tr><td>00</td><td>No Error Detected</td></tr>
<tr><td>01</td><td>Keyboard "Clock" line is stuck low</td></tr>
<tr><td>02</td><td>Keyboard "Clock" line is stuck high</td></tr>
<tr><td>03</td><td>Keyboard "Data" line is stuck low</td></tr>
<tr><td>04</td><td>Keyboard "Data" line is stuck high</td></tr>
</table></td></tr>
<tr><td>Adh</td><td>Disable Keyboard Interface</td></tr>
</table>

COMMAND	FUNCTION
Aeh	Enable Keyboard Interface
C0h	Read Input Port (P1) and send data to the system
C1h	Continuously puts the lower four bits of Port1 into the STATUS register
C2h	Continuously puts the upper four bits of Port1 into the STATUS register
D0h	Send Port 2 value to the system
D1h	Only set / reset GateA20 line based on system data bit 1
D2h	Send data back to the system as if it came from the Keyboard
D3h	Send data back to the system as if it came from Auxiliary Device
D4h	Output next received byte of data from system to Auxiliary Device
E0h	Reports the status of the test inputs
FXh	Pulse only RC (the reset line) low for 6μs if the Command byte is even

11.5 Hardware GATEA20/Keyboard Reset Control Logic

The KBC includes hardware control logic to speed-up GATEA20 and KBRESET. This control logic is controlled by LD5-CRF0 as follows:

11.5.1 KB Control Register (Logic Device 5, CR-F0)

BIT	7	6	5	4	3	2	1	0
NAME	KCLKS1	KCLKS0	RESERVED			P92EN	HGA20	HKBRST#
DEFAULT	1	0	0	0	0	0	0	0

BIT	DESCRIPTION	
7	**KCLKS1.**	Select the KBC clock rate. **Bits** **7 6** 0 0: Reserved 0 1: Reserved 1 0: KBC clock input is 12 MHz. 1 1: Reserved
6	**KCLKS0.**	
5-3	**RESERVED.**	
2	**P92EN (Port 92 Enable).** 1: Enables Port 92 to control GATEA20 and KBRESET. 0: Disables Port 92 functions.	
1	**HGA20 (Hardware GATEA 20).** 1: Selects hardware GATE A20 control logic to control GATE A20 signal. 0: Disables GATEA20 control logic functions.	
0	**HKBRST# (Hardware Keyboard Reset).** 1: Selects hardware KB RESET control logic to control KBRESET signal. 0: Disables hardware KB RESET control logic function.	

When the KBC receives data that follows a “D1” command, the hardware control logic sets or clears GATE A20 according to received data bit 1. Similarly, the hardware control logic sets or clears KBRESET depending on received data bit 0. When the KBC receives an “FE” command, the KBRESET is pulse low for 6 μs (Min.) with a 14 μs (Min.) delay.

GATE A20 and KBRESET are controlled by either software or hardware logic, and they are mutually exclusive. Then, GATE A20 and KBRESET are merged with Port92 when the P92EN bit is set.

11.5.2 Port 92 Control Register (Default Value = 0x24)

BIT	7	6	5	4	3	2	1	0
NAME	RES. (0)		RES. (1)	RES. (0)		RES. (1)	SGA20	PLKBRST#
DEFAULT	0	0	1	0	0	1	0	0

BIT	DESCRIPTION
7-6	**RES. (0)**
5	**RES. (1)**
4-3	**RES. (0)**
2	**RES. (1)**
1	**SGA20 (Special GATE A20 Control)** 1: Drives GATE A20 signal to high. 0: Drives GATE A20 signal to low.
0	**PLKBRST# (Pulled-low KBRESET).** A logical 1 on this bit causes KBRESET to drive low for 6 µS(Min.) with a 14 µS(Min.) delay. Before issuing another keyboard-reset command, the bit must be cleared.

12. CONSUMER INFRARED REMOTE (CIR)

Regarding the receiving of IR Block, the hardware uses the sampling rates of 1us, 25us, 50us and 100us to calculate the widths of H Level and L Level. The results are saved/stored in 32*8 RX FIFO. The max widths of H Level and L Level will be determined by Sample Limit Count Register. During the receiving, the hardware will reflect the FIFO status in RX FIFO Status Register. In addition, the hardware also generates status, such as Data Ready, Trigger Level Reach, FIFO Overrun and FIFO underrun, in RC Status Register.

As for the transmission, the user has to set up the Carrier frequency and the transmission mode first and then writes the widths of H Level and L Level via TX FIFO. The hardware will add Carrier to H Level according to the transmission mode.

12.1 CIR Register Table

Table 12-1 CIR Register Table

RC Block									
ExtAddr	**Name**	**7**	**6**	**5**	**4**	**3**	**2**	**1**	**0**
base+0	IRCON	R	WIREN	TXEN	RXEN	WRXINV	RXINV	Sample Period Select	
base+1	IRSTS	RDR	RTR	PE	RFO	TE	TTR	TFU	GH
base+2	IREN	RDR	RTR	PE	RFO	TE	TTR	TFU	GH
base+3	RXFCONT	RXFIFO Count							
base+4	CP	MODE	Reserved						Carrier Prescalar
base+5	CC	Carrier Period							
base+6	SLCH	Sample Limit Count High Byte							
base+7	SLCL	Sample Limit Count Low Byte							
base+8	FIFOCON	TXFIFOCLR	R	Tx Trigger Level		RXFIFOCLR	R	Rx Trigger Level	
base+9	IRFIFOSTS	IR_Pending	RX_GS	RX_FTA	RX_Empty	RX_Full	TX_FTA	TX_Empty	TX_Full
base+A	SRXFIFO	Sample RX FIFO							
base+B	TXFCONT	TX FIFO Count							
base+C	STXFIFO	Sample TX FIFO							
base+D	FCCH	Frame Carrier Count High Byte							
base+E	FCCL	Frame Carrier Count Low Byte							
base+F	IRFSM	R	Decoder FSM			R	Encoder FSM		

12.1.1 IR Configuration Register – Base Address + 0

Attribute: Read/Write

Size: 8 bits

BIT	7	6	5	4	3	2	1	0
NAME	**Received**	**WIREN**	**TXEN**	**RXEN**	**WRXINV**	**RXINV**	**Sample Period Select**	
DEFAULT	0	0	0	0	0	1	0	0

BIT	**DESCRIPTION**
7	**Received**.
6	**Wide-band IR Enable**

5	**TX Enable** 1: Transmission Enable. After confirming that FIFO is not empty, the transmission starts (the hardware will wait until TX FIFO data are written). If TX Enable is set to 0 during the transmission, the transmission stops when the transmission of FIFO data is completed. 0: Transmission Disable.
4	**RX Enable**
3	**Wide-band IR Rx Invert Enable** 0: Dongle Carrier ON is high, OFF (Idle) is low. 1: Dongle Carrier ON is low, OFF (Idle) is high.
2	**IR Rx Invert Enable** 0: Dongle Carrier ON is high, OFF (Idle) is low. 1: Dongle Carrier ON is low, OFF (Idle) is high.
1~0	**Sample Period Select** 00:1us, 01: 25us, 10: 50us, 11: 100us Note: In the 1us mode, the pulse mode will not function due to the IR regulations.

12.1.2 IR Status Register – Base Address + 1

Attribute: Read/Write

Size: 8 bits

BIT	7	6	5	4	3	2	1	0
Name	**RDR**	**RTR**	**PE**	**RFO**	**TE**	**TTR**	**TFU**	**GH**
DEFAULT	0	0	0	0	0	0	0	0

BIT	DESCRIPTION
7	**RX Data Ready** (Writing 1 will clear the bit).
6	**RX FIFO Trigger Level Reach** (Writing 1 will clear the bit).
5	**Packet End** (Writing 1 will clear the bit).
4	**RX FIFO Overrun** (Overrun and Data Ready will be simultaneously generated. Writing 1 will clear the bit).
3	**TX FIFO Empty** (Writing 1 will clear the bit).
2	**TX FIFO Trigger Level Reach** (Writing 1 will clear the bit).
1	**TX FIFO Underrun** (Writing 1 will clear the bit).
0	**Min Length Detected** (Writing 1 will clear the bit) 1: The IR Data length received is shorter than the default value. 0: The IR Data length received is longer than the default value.

12.1.3 IR Interrupt Configuration Register – Base Address + 2

Attribute: Read/Write

Size: 8 bits

BIT	7	6	5	4	3	2	1	0

NAME	RDR	RTR	PE	RFO	TE	TTR	TFU	GH
DEFAULT	0	0	0	0	0	0	0	0

1: Enable interrupt; 0: Disable interrupt

BIT	DESCRIPTION
7	**RX Data Ready**
6	**RX FIFO Trigger Level Reach**
5	**Packet End**
4	**RX FIFO Overrun** (Overrun and Data Ready will be simultaneously generated).
3	**TX FIFO Empty**
2	**TX FIFO Trigger Level Reach**
1	**TX FIFO Underrun**
0	**Min Length Detected**

Note. When an Interrupt occurs, it only can be cleared by writing IR Status Register to 1.

12.1.4 RX FIFO Count– Base Address + 5

Attribute: Read

Size: 8 bits

BIT	7	6	5	4	3	2	1	0
NAME	FIFO Count							
DEFAULT	0	0	0	0	0	0	0	0

1: Enable; 0: Disable

BIT	DESCRIPTION
7~0	**RX FIFO Count**

12.1.5 IR TX Carrier Prescalar Configuration Register (CP) – Base Address + 4

Attribute: Read/Write

Size: 8 bits

BIT	7	6	5	4	3	2	1	0
NAME	Mode	Reserved						CP
DEFAULT	0	0	0	0	0	0	0	0

BIT	DESCRIPTION
7	**Mode** 0 : DC Mode 1 : Pulse Mode
6~1	**Reserved**.

0	**Carrier Prescalar** (CP). This bit is set for the Prescalar value of the IR TX carrier frequency.

12.1.6 IR TX Carrier Period Configuration Register (CC) – Base Address + 5

Attribute: Read/Write

Size: 8 bits

BIT	7	6	5	4	3	2	1	0
NAME	Carrier Period (CC)							
DEFAULT	0	0	0	0	0	0	0	0

BIT	DESCRIPTION
7~0	This byte is set for IR TX carrier period. The actual carrier period will be: Period = 2 * (2 ^ (CP*2)) * (CC+1) / (System Clock), where the frequency = 1 / period, and System Clock = 24MHz. Setting CP and CC to 0 will cause stop the device to from use using anyno carrier at all (that is, no light modulation, just constant on and off periods). The period count value CC can be any number from 0 to 255.

12.1.7 IR RX Sample Limited Count High Byte Register (RCLCH) – Base Address + 6

Attribute: Read/Write

Size: 8 bits

BIT	7	6	5	4	3	2	1	0
NAME	Sample Limited Count High Byte							
DEFAULT	0	0	0	0	0	0	0	0

BIT	DESCRIPTION
7~0	This byte is defined as the high byte of the limited count in the IR RX mode.

12.1.8 IR RX Sample Limited Count Low Byte Register (RCLCL) – Base Address + 7

Attribute: Read/Write

Size: 8 bits

BIT	7	6	5	4	3	2	1	0
NAME	Sample Limited Count low Byte							
DEFAULT	0	0	0	0	0	0	0	0

BIT	DESCRIPTION
7~0	This byte is defined as the low byte of the limited count in the IR RX mode.

Note. (RCLCH, RCLCL) is defined as 16 bits value of the limited count in the IR RX mode. When the RX date length reaches the limited count, Packet End status will appear.

12.1.9 IR FIFO Configuration Register (FIFOCON) – Base Address + 8

Attribute: Read/Write
Size: 8 bits

BIT	7	6	5	4	3	2	1	0
NAME	TXFIFOCLR	Reserved	TX Trigger Level		RXFIFOCLR	Reserved	RX Trigger Level	
DEFAULT	0	0	0	0	0	0	0	0

BIT	DESCRIPTION
7	**TX FIFO Cleared**.
6	**Reserved**.
5~4	**TX Trigger Level** **Bits** **5 4** 0 0: 31 0 1: 24 1 0: 16 1 1: 8
3	**RX FIFO Cleared**.
2	**Reserved**.
1~0	**RX Trigger Level** **Bits** **1 0** 0 0: 1 0 1: 8 1 0: 16 1 1: 24

12.1.10 IR Sample RX FIFO Status Register – Base Address + 9

Attribute: Read Only
Size: 8 bits

BIT	7	6	5	4	3	2	1	0
NAME	IR_Pending	RX_GS	RX_FTA	RX_Empty	RX_Full	TX_FTA	TX_Empty	TX_Full
DEFAULT	0	0	0	0	0	0	0	0

BIT	DESCRIPTION
7	**IR Pending** 1: No Interrupt 0: Interrupt issue
6	**Minimum Length Detect Status**. This bit will be cleared when Packet End appears.
5	**RX FIFO Trigger Level Active**.
4	**RX FIFO Empty Flag**.
3	**RX FIFO Full Flag**.

BIT	DESCRIPTION
2	**TX FIFO Trigger Level Active**.
1	**TX FIFO Empty Flag**.
0	**TX FIFO Full Flag**.

12.1.11IR Sample RX FIFO Register – Base Address + A

Attribute: Read Only

Size: 8 bits

BIT	7	6	5	4	3	2	1	0
NAME	Voltage Level	Sample RX FIFO						

BIT	DESCRIPTION
7	**Voltage Level** 0: Low, 1: High
6~0	**RX data length** (Unit : Sample Period) Note: 1. 0x80 is Packet End. The hardware enters the Idle state after checking Rx Channel. 2. When 0x00 represents the glitch packet, it means pulses shorter than 3/4 sample period are received. 3. Pulses that are shorter than 1/4 sample periods will be ignored automatically.

12.1.12TX FIFO Count– Base Address + 5

Attribute: Read

Size: 8 bits

BIT	7	6	5	4	3	2	1	0
NAME	TX FIFO Count							
DEFAULT	0	0	0	0	0	0	0	0

1: Enable; 0: Disable

BIT	DESCRIPTION
7~0	**TX FIFO Count**

12.1.13IR Sample TX FIFO Register – Base Address + C

Attribute: Read Only

Size: 8 bits

BIT	7	6	5	4	3	2	1	0
NAME	Voltage Level	Sample TX FIFO						

BIT	DESCRIPTION
7	**Voltage Level** 0: Low, 1: High
6~0	**TX data length** (Unit : Sample Period)

12.1.14 IR Carrier Count High Byte Register – Base Address + D

Attribute: Read Only

Size: 8 bits

BIT	7	6	5	4	3	2	1	0
NAME	Carrier Count High Byte							

BIT	DESCRIPTION
7~0	**Carrier Count High Byte**. This byte records the total amount of the total rising edges until time-out event appears.

12.1.15 IR Carrier Count Low Byte Register – Base Address + E

Attribute: Read Only

Size: 8 bits

BIT	7	6	5	4	3	2	1	0
NAME	Carrier Count Low Byte							

BIT	DESCRIPTION
7~0	**Carrier Count Low Byte**. This byte records the total amount of the the rising edges until time-out event appears.

After a time-out of reception on the learning receiver, this response is sent to tell the host the carrier frequency of the previous sample. The Carrier Count High Byte (ch) and Carrier Count Low Byte (cl) specify the cycle counts of cycles of the carrier. Carrier counts can also be thought ofregarded as the number of leading edges in the previous sample.

This is used toe calculation of the calculate carrier frequency is as followsfollowed:

$lastCarrierCount_{(decimal)}$ = ch*256+cl;

Thus,

Carrier frequency = (lastCarrierCount) / (irPacketOnDuration);

The **irPacketOnDuration** value is the total amount of time that the envelope of the signal was is high. The IR receiver should keep track of the time that of the high envelope is high and return it using this response.

This response is unsolicited. It is returned by the receiver when IR arrives but is never explicitly requested.

12.1.16 IR FSM Status Register (IRFSM) – Base Address + F

Attribute: Read Only

Size: 8 bits

BIT	7	6	5	4	3	2	1	0
NAME	Reserved	Decoder FSM			Reserved	Encoder FSM		
DEFAULT	0	0	0	0	0	0	0	0

BIT	DESCRIPTION
7	**Reserved.**
6	**Decoder over status**
5	**Decoder continuing status**
4	**Decoder wait H status** 1: idle, 0: RX busy
3	**Reserved**.
2	**Encoder Idle Status**. 1: idle, 0: TX busy
1	**Encoder Read Status**
0	**Encoder Level Output Status**

12.1.17 IR Minimum Length Register – Base Address + F

Attribute: Write Only

Size: 8 bits

BIT	7	6	5	4	3	2	1	0
NAME	Min Length Register							
DEFAULT	0	0	0	0	0	0	0	0

BIT	DESCRIPTION
7~0	**Min Length Register**. Set up the shortest expected length of each carrier on the RX receiver (Unit: Sample Clock).

13. CONSUMER INFRARED REMOTE (CIR) WAKE-UP

One of the features of the NCT5532D is system boot-up by a remote controller. The hardware will store a specifically appointed key command from the IR remote controller in the FIFO of 67Byte.

The same key is required to re-boot the system after the computer shut-down. Such way can be applied to any remote controllers. Learning is necessary only at the first time.

13.1 CIR WAKE-UP Register Table

RC Block									
ExtAddr	**Name**	**7**	**6**	**5**	**4**	**3**	**2**	**1**	**0**
base+0	IRCON	DEC_RST	Mode[1]	Mode[0]	RXEN	IgnoreEN	RXINV	Sample Period Select	
base+1	IRSTS	RDR	RTR	PE	RFO	GH	R	R	IR Pending
base+2	IREN	RDR	RTR	PE	RFO	GH	R		
Base+3		FIFO_COMPARE_DEEP							
base+4		FIFO_COMPARE_TOLERANCE							
base+5		FIFO_Count							
Base+6	SLCH	Sample Limit Count High Byte							
base+7	SLCL	Sample Limit Count Low Byte							
base+8	FIFOCON	R				RXFIFOCLR	R	Rx Trigger Level	
base+9	SRXFSTS	GS	FTA	Empty	Full	R			
base+A		Sample RX FIFO							
base+B		WR_FIFO_DATA							
Base+C		Read FIFO Only							
Base+D		Read FIFO Only Index							
Base+E		FIFO_Ignore							
Base+F	IRFSM	R	Decoder FSM			R			Wakeup Event

13.1.1 IR Configuration Register – Base Address + 0

Attribute: Read/Write

Size: 8 bits

BIT	7	6	5	4	3	2	1	0
NAME	**DEC_RST**	**Mode[1]**	**Mode[0]**	**RXEN**	**Received**	**RXINV**	**Sample Period Select**	
DEFAULT	0	0	1	0	0	1	1	0

BIT	**DESCRIPTION**
7	**Reset CIR DECODER** (Write 1 to clear)
6	**Mode[1]** : 0: FIFO can't be written 1: FIFO can be written
5	**Mode[0]** 0: Learning Mode 1: Wake up Mode (Before enter in Power S3 state, this bit should be set) This bit reset by VCC.

BIT	DESCRIPTION
4	**RX Enable**
3	**Ignore Bit Enable**
2	**IR Rx Invert Enable** 0: Dongle Carrier ON is high, OFF (Idle) is low. 1: Dongle Carrier ON is low, OFF (Idle) is high.
1~0	**Sample Period Select** 00:1us, 01: 25us, 10: 50us, 11: 100us Note: In the 1us mode, the pulse mode will not function due to the IR regulations.

13.1.2 IR Status Register – Base Address + 1

Attribute: Read/Write

Size: 8 bits

BIT	7	6	5	4	3	2	1	0
NAME	RDR	RTR	PE	RFO	GH	Received		IR_Pending
DEFAULT	0	0	0	0	0	0	0	0

BIT	DESCRIPTION
7	**RX Data Ready** (Writing 1 will clear the bit).
6	**RX FIFO Trigger Level Reach** (Writing 1 will clear the bit).
5	**Packet End** (Writing 1 will clear the bit).
4	**RX FIFO Overrun** (Overrun and Data Ready will be simultaneously generated. Writing 1 will clear the bit).
3	**Min Length Detected** (Writing 1 will clear the bit) 1: The IR Data length received is shorter than the default value. 0: The IR Data length received is longer than the default value.
2~1	**Reserved**.
0	**IR Pending** 1: No Interrupt 0: Interrupt issue

13.1.3 IR Interrupt Configuration Register – Base Address + 2

Attribute: Read/Write

Size: 8 bits

BIT	7	6	5	4	3	2	1	0
NAME	RDR	RTR	PE	RFO	GH	Reserved		
DEFAULT	0	0	0	0	0	0	0	0

1: Enable interrupt; 0: Disable interrupt

BIT	DESCRIPTION

7	**RX Data Ready**
6	**RX FIFO Trigger Level Reach**
5	**Packet End**
4	**RX FIFO Overrun** (Overrun and Data Ready will be simultaneously generated).
3	**Min Length Detected**
2~0	**Reserved**

Note. When an Interrupt occurs, it only can be cleared by writing IR Status Register to 1.

13.1.4 IR TX Configuration Register – Base Address + 3

Attribute: Read/Write

Size: 8 bits

BIT	7	6	5	4	3	2	1	0
NAME	FIFO Compare Deep							
DEFAULT	0	1	0	0	0	0	1	1

1: Enable; 0: Disable

BIT	DESCRIPTION
7~0	When in S3 state, how many bytes need to compare. Default is 67 bytes.

13.1.5 IR FIFO Compare Tolerance Configuration Register – Base Address + 4

Attribute: Read/Write

Size: 8 bits

BIT	7	6	5	4	3	2	1	0
NAME	FIFO Compare Tolerance							
DEFAULT	0	0	0	0	0	0	0	0

BIT	DESCRIPTION
7~0	**FIFO Data Tolerance between Learning mode and Wakeup mode**. (Every byte) FIFO Date Tolerance = (Learning mode data) – (Wakeup mode data)

13.1.6 RX FIFO Count– Base Address + 5

Attribute: Read

Size: 8 bits

BIT	7	6	5	4	3	2	1	0
NAME	FIFO Count							
DEFAULT	0	0	0	0	0	0	0	0

1: Enable; 0: Disable

BIT	DESCRIPTION

7~0	RX FIFO Count

13.1.7 IR RX Sample Limited Count High Byte Register (RCLCH) – Base Address + 6

Attribute: Read/Write
Size: 8 bits

BIT	7	6	5	4	3	2	1	0
NAME	Sample Limited Count High Byte							
DEFAULT	0	0	0	0	0	0	0	0

BIT	DESCRIPTION
7~0	This byte is defined as the high byte of the limited count in the IR RX mode.

13.1.8 IR RX Sample Limited Count Low Byte Register (RCLCL) – Base Address + 7

Attribute: Read/Write
Size: 8 bits

BIT	7	6	5	4	3	2	1	0
NAME	Sample Limited Count low Byte							
DEFAULT	0	0	0	0	0	0	0	0

BIT	DESCRIPTION
7~0	This byte is defined as the low byte of the limited count in the IR RX mode.

Note. (RCLCH, RCLCL) is defined as 16 bits value of the limited count in the IR RX mode. When the RX date length reaches the limited count, Packet End status will appear.

13.1.9 IR FIFO Configuration Register (FIFOCON) – Base Address + 8

Attribute: Read/Write
Size: 8 bits

BIT	7	6	5	4	3	2	1	0
NAME	Reserved				RXFIFOCLR	Reserved	RX Trigger Level	
DEFAULT	0	0	0	0	0	0	0	0

BIT	DESCRIPTION
7~4	**Reserved**
3	**RX FIFO Cleared.**
2	**Reserved.**
1~0	**RX Trigger Level** **Bits** **1 0** 0 0: 67 0 1: 66

	1 0: 65 1 1: 64

13.1.10 IR Sample RX FIFO Status Register – Base Address + 9

Attribute: Read Only

Size: 8 bits

BIT	7	6	5	4	3	2	1	0
NAME	GS	FTA	Empty	Full	Reserved			
DEFAULT	0	0	0	0	0	0	0	0

BIT	DESCRIPTION
7	**Minimum Length Detect Status**. This bit will be cleared when Packet End appears.
6	**RX FIFO Trigger Level Active.**
5	**RX FIFO Empty Flag**.
4	**RX FIFO Full Flag**.
3~0	**Reserved**

13.1.11 IR Sample RX FIFO Register – Base Address + A

Attribute: Read Only

Size: 8 bits

BIT	7	6	5	4	3	2	1	0
NAME	Voltage Level	Sample RX FIFO						

BIT	DESCRIPTION
7~6	**Voltage Level** 0: Low, 1: High
0	**RX data length** (Unit : Sample Period) Note: 1. 0x80 is Packet End. The hardware enters the Idle state after checking Rx Channel. 2. When 0x00 represents the glitch packet, it means pulses shorter than 3/4 sample period are received. 3. Pulses that are shorter than 1/4 sample periods will be ignored automatically.

13.1.12 Write FIFO – Base Address + B

Attribute: Write Only

Size: 8 bits

BIT	7	6	5	4	3	2	1	0
NAME	Voltage Level	Write Sample RX FIFO						

BIT	DESCRIPTION

BIT	DESCRIPTION
7~6	**Voltage Level** 0: Low, 1: High
0	**RX data length** (Unit : Sample Period)

Note. Before writing FIFO Data, mode[1] register should be set.

13.1.13Read FIFO Only – Base Address + C

Attribute: Read Only

Size: 8 bits

BIT	7	6	5	4	3	2	1	0
NAME	**Voltage Level**	**Sample RX FIFO**						

BIT	DESCRIPTION
7~6	**Voltage Level** 0: Low, 1: High
0	RX data length (Unit : Sample Period)

Note. Only Read FIFO Data.

13.1.14Read FIFO Index – Base Address + D

Attribute: Read Only

Size: 8 bits

BIT	7	6	5	4	3	2	1	0
NAME	**FIFO Index**							

BIT	DESCRIPTION
7~0	Indicate that FIFO Index when only read FIFO data(Base Address + C)

Note. Only Read FIFO Data.

13.1.15Reserved – Base Address + E

13.1.16 IR FSM Status Register (IRFSM) – Base Address + F

Attribute: Read Only

Size: 8 bits

BIT	7	6	5	4	3	2	1	0
NAME	Reserved	Decoder FSM			Reserved			Wake up event
DEFAULT	0	0	0	0	0	0	0	0

BIT	DESCRIPTION
7	Reserved
6~4	CIR State Machine
3~1	Reserved
0	**Wake up event:** 0: CIR wake up event has not been triggered. 1: CIR wake up event has been triggered. (Wake up event clear: Write 11b to “Logic Decice A, CRE8h, bit7~6” then 00b.)

13.1.17IR Minimum Length Register – Base Address + F

Attribute: Write Only

Size: 8 bits

BIT	7	6	5	4	3	2	1	0
NAME	Min Length Register							
DEFAULT	0	0	0	0	0	0	0	0

BIT	DESCRIPTION
7~0	Min Length Register. Set up the shortest expected length of each carrier on the RX receiver (Unit: Sample Clock).

14. POWER MANAGEMENT EVENT

The PME# signal is connected to the South Bridge and is used to wake up the system from S1 ~ S5 sleeping states.

One control bit and four registers in the NCT5532D are associated with the PME function. The control bit is at Logical Device A, CR[F2h], bit[0] and is for enabling or disabling the PME function. If this bit is set to "0", the NCT5532D won't output any PME signal when any of the wake-up events has occurred and is enabled. The four registers are divided into PME status registers and PME interrupt registers of wake-up events [Note.1].

1) The PME status registers of wake-up event:
   - At Logical Device A, CR[F3h] and CR[F4h]
   - Each wake-up event has its own status
   - The PME status should be cleared by writing a "1" before enabling its corresponding bit in the PME interrupt registers
2) The PME interrupt registers of wake-up event:
   - At Logical Device A, CR[F6h] and CR[F7h]
   - Each wake-up event can be enabled / disabled individually to generate a PME# signal

[Note.1] PME wake-up events that the NCT5532D supports include:

- Mouse event*
- Keyboard event*
- GP41 events *
- CIR*
- UART A IRQ event
- IR IRQ event
- Hardware Monitor IRQ event
- WDT1 event
- RIA (UARTA Ring Indicator) event

[Note.2] All the above support both S0 and S1 states. Events with the "*" mark also support S3 ~ S5 states.

14.1 Power Control Logic

This chapter describes how the NCT5532D implements its ACPI function via these power control pins: PSIN#, PSOUT#, SLP_S3# and PSON#. The following figure illustrates the relationships.

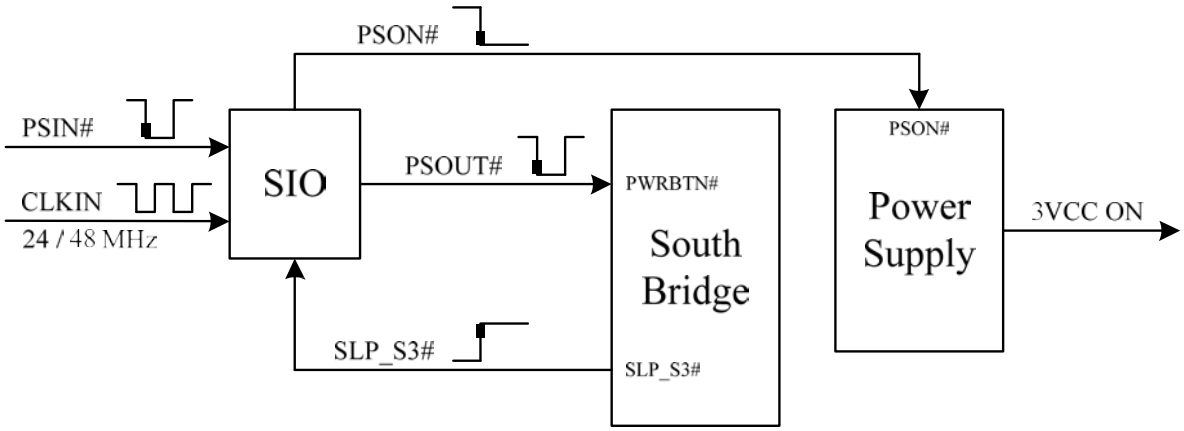

Figure 14-1 Power Control Mechanism

14.1.1 PSON# Logic

14.1.1.1. Normal Operation

The PSOUT# signal will be asserted low if the PSIN# signal is asserted low. The PSOUT# signal is held low for as long as the PSIN# is held low. The South Bridge controls the SLP_S3# signal through the PSOUT# signal. The PSON# is directly connected to the power supply to turn on or off the power.

Figure 14-2 shows the power on and off sequences.

The ACPI state changes from S5 to S0, then to S5

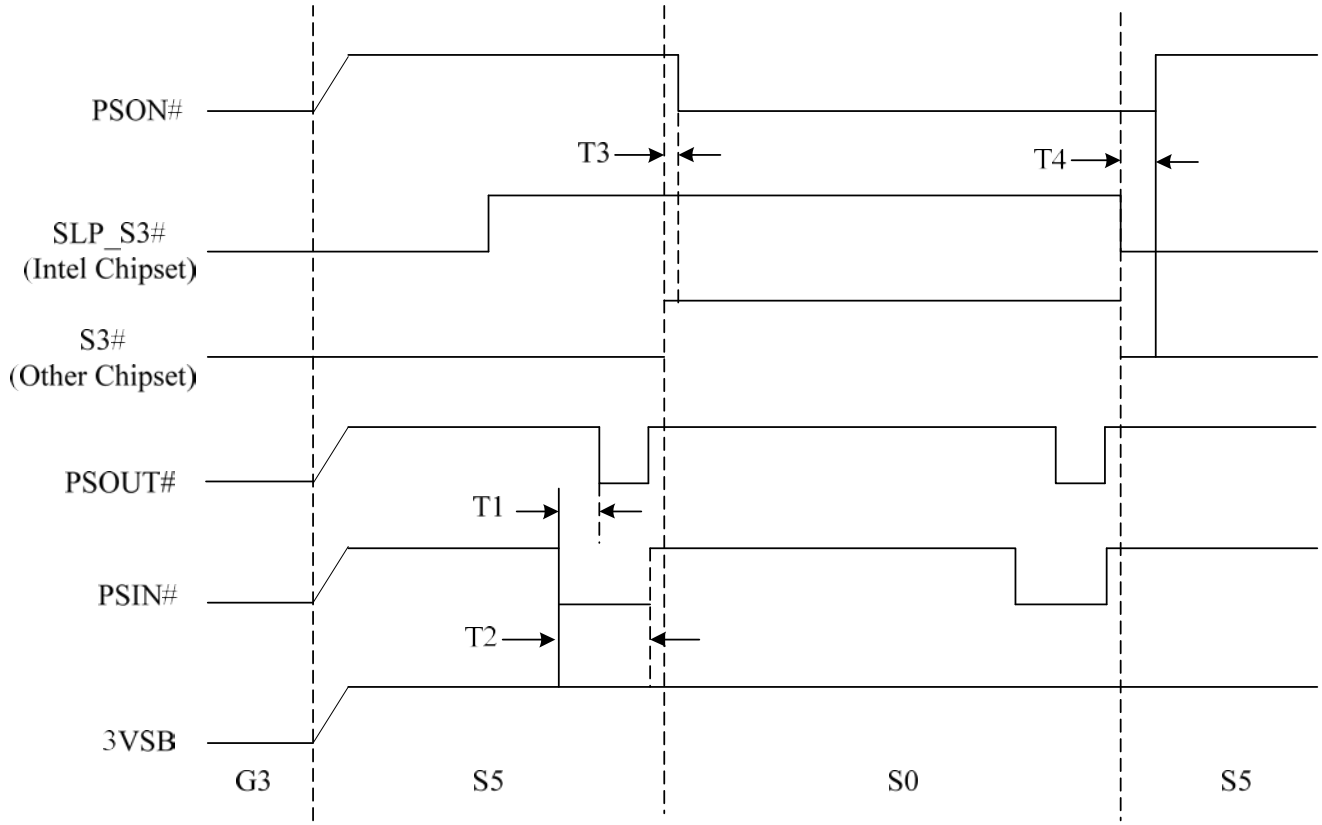

Figure 14-2 Power Sequence from S5 to S0, then Back to S5

14.1.2 AC Power Failure Resume

By definition, AC power failure means that the standby power is removed. The power failure resume control logic of the NCT5532D is used to recover the system to a pre-defined state after AC power failure. Two control bits at Logical Device A, CR[E4h], bits[6:5] indicate the pre-defined state. The definition of these two bits is listed in the following table:

Table 14-1 Bit Map of Logical Device A, CR[E4h], Bits[6:5]

LOGICAL DEVICE A, CR[E4H], BITS[6 :5]	DEFINITION
00	System always turns off when it returns from AC power failure
01	System always turns on when it returns from AC power failure
10	System turns off / on when it returns from power failure depending on the state before the power failure. (Please see Note 1)
11	User defines the state before the power failure. (The previous state is set at CRE6[4]. Please see Note 2)

Note1. The NCT5532D detects the state before power failure (on or off) through the SLP_S3# signal and the 3VCC power. The relation is illustrated in the following two figures.

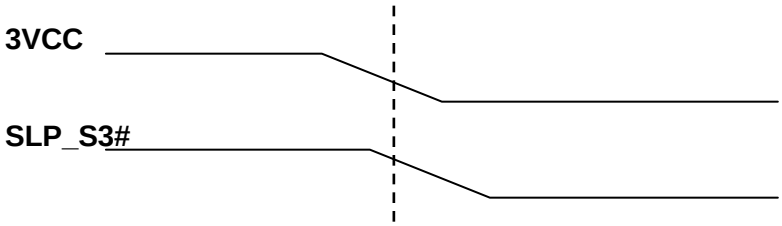

Figure 14-3 The previous state is “on”

3VCC falls to 2.6V and SLP_S3# keeps at 2.0V.

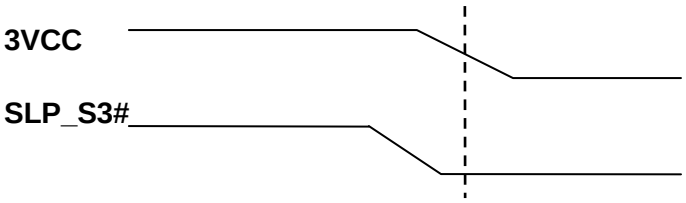

Figure 14-4 The previous state is “off”.

3VCC falls to 2.6V and SLP_S3# keeps at 0.8V.

Note 2.

Logical Device A, CR[E6h] bit [4]	Definition
0	User defines the state to be “on”
1	User defines the state to be “off”

To ensure that VCC does not fall faster than VSB in various ATX Power Supplies, the NCT5532D adds the option of “user define mode” for the pre-defined state before AC power failure. BIOS can set the pre-defined state to be “On” or “Off”. According to this setting, the system is returned to the pre-defined state after the AC power recovery.

14.2 Wake Up the System by Keyboard and Mouse

The NCT5532D generates a low pulse through the PSOUT# pin to wake up the system when it detects a key code pressed or mouse button clicked. The following sections describe how the NCT5532D works.

14.2.1 Waken up by Keyboard events

The keyboard Wake-Up function is enabled by setting Logical Device A, CR[E0h], bit 6 to “1”.

There are two keyboard events can be used for the wake-up

1) Any key – Set bit 0 at Logical Device A, CR[E0h] to “1” (Default).
2) Specific keys (Password) – Set bit 0 at Logical Device A, CR[E0h] to “0”.

Three sets of specific key combinations are stored at Logical Device A. CR[E1h] is an index register to indicate which byte of key code storage (0x00h ~ 0x0Eh, 0x30h ~ 0x3Eh, 0x40h ~ 0x4Eh) is going to be read or written through CR[E2h]. According to IBM 101/102 keyboard specification, a complete key code contains a 1-byte make code and a 2-byte break code. For example, the make code of “0” is 0x45h, and the corresponding break code is 0xF0h, 0x45h.

The approach to implement Keyboard Password Wake-Up Function is to fill key codes into the password storage. Assume that we want to set “012” as the password. The storage should be filled as below. Please note that index 0x09h ~ 0x0Eh must be filled as 0x00h since the password has only three numbers.

Index(CRE1)Æ	00	01	02	03	04	05	06	07	08	09	0A	0B	0C	0D	0E
Data(CRE2)Æ	1E	F0	1E	16	F0	16	45	F0	45	00	00	00	00	00	00

First-pressed key “0”

Second-pressed key “1”

Third-pressed key “2”

14.2.2 Waken up by Mouse events

The mouse Wake-Up function is enabled by setting Logical Device A, CR[E0h], bit 5 to “1”.

The following specific mouse events can be used for the wake-up:

- Any button clicked or any movement
- One click of the left or the right button
- One click of the left button
- One click of the right button
- Two clicks of the left button
- Two clicks of the right button.

Three control bits (ENMDAT_UP, MSRKEY, MSXKEY) define the combinations of the mouse wake-up events. Please see the following table for the details.

Table 14-2 Definitions of Mouse Wake-Up Events

ENMDAT_UP (LOGICAL DEVICE A, CR[E6H], BIT 7)	MSRKEY (LOGICAL DEVICE A, CR[E0H], BIT 4)	MSXKEY (LOGICAL DEVICE A, CR[E0H], BIT 1)	WAKE-UP EVENT

ENMDAT_UP (LOGICAL DEVICE A, CR[E6H], BIT 7)	MSRKEY (LOGICAL DEVICE A, CR[E0H], BIT 4)	MSXKEY (LOGICAL DEVICE A, CR[E0H], BIT 1)	WAKE-UP EVENT
1	x	1	Any button clicked or any movement.
1	x	0	One click of the left or right button.
0	0	1	One click of the left button.
0	1	1	One click of the right button.
0	0	0	Two clicks of the left button.
0	1	0	Two clicks of the right button.

14.3 Resume Reset Logic

The RSMRST# signal is a reset output and is used as the VSB power on reset signal for the South Bridge.

When the NCT5532D detects the 3VSB voltage rises to “V1”, it then starts a delay – “t1” before the rising edge of RSMRST# asserting. If the 3VSB voltage falls below “V2”, the RSMRST# de-asserts immediately.

Timing and voltage parameters are shown in Figure 14-5 and Table 14-3.

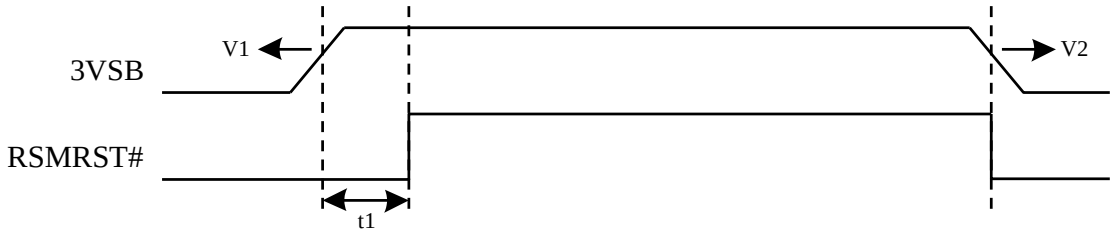

Figure 14-5 Mechanism of Resume Reset Logic

Table 14-3 Timing and Voltage Parameters of RSMRST#

NAME	PARAMETER	MIN.	MAX.	UNIT
V1	3VSB Valid Voltage	-	3.033	V
V2	3VSB Ineffective Voltage	2.882	-	V
t1	Valid 3VSB to RSMRST# inactive	100	200	mS

15. SERIALIZED IRQ

The NCT5532D supports a serialized IRQ scheme. This allows a signal line to be used to report the parallel interrupt requests. Since more than one device may need to share the signal serial SERIRQ signal, an open drain signal scheme is employed. The clock source is the PCI clock. The serialized interrupt is transferred on the SERIRQ signal, one cycle consisting of three frames types: the Start Frame, the IRQ/Data Frame, and the Stop Frame.

15.1 Start Frame

There are two modes of operation for the SERIRQ Start Frame: Quiet mode and Continuous mode.

In the Quiet mode, the NCT5532D drives the SERIRQ signal active low for one clock, and then tri-states it. This brings all the state machines of the NCT5532D from idle to active states. The host controller (the South Bridge) then takes over driving SERIRQ signal low in the next clock and continues driving the SERIRQ low for programmable 3 to 7 clock periods. This makes the total number of clocks low 4 to 8 clock periods. After these clocks, the host controller drives the SERIRQ high for one clock and then tri-states it.

In the Continuous mode, the START Frame can only be initiated by the host controller to update the information of the IRQ/Data Frame. The host controller drives the SERIRQ signal low for 4 to 8 clock periods. Upon a reset, the SERIRQ signal is defaulted to the Continuous mode for the host controller to initiate the first Start Frame.

Please see the diagram below for more details.

Start Frame Timing with source sampled a low pulse on IRQ1.

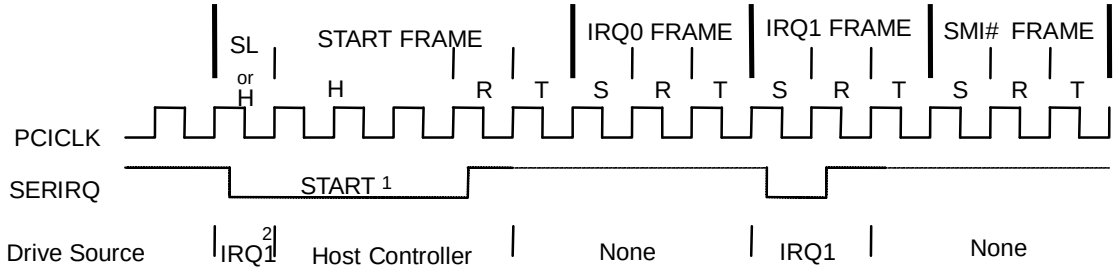

Figure 15-1 Start Frame Timing with Source Sampled A Low Pulse on IRQ1

H=Host Control SL=Slave Control R=Recovery T=Turn-around S=Sample

Note:

1. The Start Frame pulse can be 4-8 clocks wide.
2. The first clock of Start Frame is driven low by the NCT5532D because IRQ1 of the NCT5532D needs an interrupt request. Then the host takes over and continues to pull the SERIRQ low.

15.2 IRQ/Data Frame

Once the Start Frame has been initiated, the NCT5532D must start counting frames based on the rising edge of the start pulse. Each IRQ/Data Frame has three clocks: the Sample phase, the Recovery phase, and the Turn-around phase.

During the Sample phase, the NCT5532D drives SERIRQ low if the corresponding IRQ is active. If the corresponding IRQ is inactive, then SERIRQ must be left tri-stated. During the Recovery phase, the NCT5532D device drives the SERIRQ high. During the Turn-around phase, the NCT5532D device leaves the SERIRQ tri-stated. The NCT5532D starts to drive the SERIRQ line from the beginning of “IRQ0 FRAME” based on the rising edge of PCICLK.

The IRQ/Data Frame has a specific numeral order, as shown in Table 15-1.

Table 15-1 SERIRQ Sampling Periods

SERIRQ SAMPLING PERIODS			
IRQ/DATA FRAME	**SIGNAL SAMPLED**	**# OF CLOCKS PAST START**	**EMPLOYED BY**
1	IRQ0	2	Reserved
2	IRQ1	5	Keyboard
3	SMI#	8	H/W Monitor & SMI
4	IRQ3	11	IR
5	IRQ4	14	UART A
6	IRQ5	17	-
7	IRQ6	20	Reserved
8	IRQ7	23	Reserved
9	IRQ8	26	-
10	IRQ9	29	-
11	IRQ10	32	-
12	IRQ11	35	-
13	IRQ12	38	Mouse
14	IRQ13	41	Reserved
15	IRQ14	44	-
16	IRQ15	47	-
17	IOCHCK#	50	-
18	INTA#	53	-
19	INTB#	56	-
20	INTC#	59	-
21	INTD#	62	-
32:22	Unassigned	95	-

15.3 Stop Frame

After all IRQ/Data Frames have completed, the host controller will terminates SERIRQ with a Stop frame. Only the host controller can initiate the Stop Frame by driving SERIRQ low for 2 or 3 clocks. If the Stop Frame is low for 2 clocks, the Sample mode of next SERIRQ cycle's Sample mode is the Quiet mode. If the Stop Frame is low for 3 clocks, the Sample mode of next SERIRQ cycle is the Continuous mode.

Please see the diagram below for more details.

Stop Frame Timing with Host Using 17 SERIRQ sampling period.

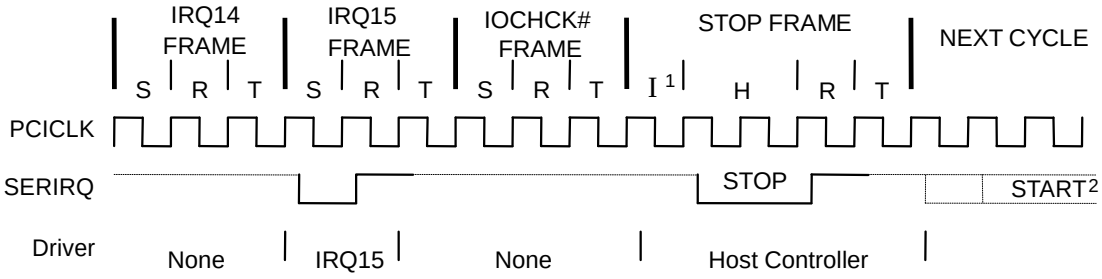

Figure 15-2 Stop Frame Timing with Host Using 17 SERIRQ Sampling Period

H=Host Control R=Recovery T=Turn-around S=Sample I= Idle.

Note:

1. There may be none, one or more Idle states during the Stop Frame.
2. The Start Frame pulse of next SERIRQ cycle <u>may</u> or may not start immediately after the turn-around clock of the Stop Frame.

16. WATCHDOG TIMER

The Watchdog Timer of the NCT5532D consists of an 8-bit programmable time-out counter and a control and status register. GPIO2, GPIO4, GPIO5, GPIO7 provides an alternative WDT1 function. This function can be configured by the relative GPIO control register. The units of Watchdog Timer counter can be selected at Logical Device 8, CR[F5h], bit[3]. The time-out value is set at Logical Device 8, CR[F6h]. Writing zero disables the Watchdog Timer function. Writing any non-zero value to this register causes the counter to load this value into the Watchdog Timer counter and start counting down.

When Watchdog Timer 1 time-out event is occurring, GPIO2, GPIO4, bit[0] & [4] and GPIO7, bit[0] will trigger a low pluse apporx 100mS or low level by Logical Device 8 CR[F5h], bit[0]. In other words, when the value is counted down to zero, the timer stops, and the NCT5532D sets the WDT1 status bit in Logical Device 8, CR[F7h], bit[4]. Writing a zero will clear the status bit. it. This bit will also be cleared if LRESET# or PWROK# signal is asserted.

17. GENERAL PURPOSE I/O

17.1 GPIO ARCHITECTURE

The NCT5532D provides 23 input/output ports that can be individually configured to perform a simple basic I/O function or alternative, pre-defined function. Users can configure each individual port to be an input or output port by programming respective bit in selection register (0 = output, 1 = input). Invert port value by setting inversion register (0 = non–inverse, 1 = inver-se). Port value is read/write through data register.

In addition, only **GP41** is designed to be able to assert **PSOUT# or PME#** signal to wake up the system if any of them has any transitions. There are about 16ms debounced circuit inside GP41 and it can be disabled by programming respective bit (LD9, CR[Feh] bit 4~7). The following table gives more detailed register map on GP41.

Table 17-1 Relative Control Registers of GPIO 41 that Support Wake-Up Function

	EVENTROUTE I (PSOUT#) **0 : DISABLE** **1 : ENABLE**	**EVENTROUTE II (PME#)** **0 : DISABLE** **1 : ENABLE**	**EVENT DEBOUNCED** **0 : ENABLE** **1 : DISABLE**
GPIO41 (PIN52)	LDA, CR[FEh] bit7	LDA, CR[FEh] bit3	LD9, CR[FEh] bit4

Table 17-2 GPIO Group Programming Table

Equips maximum 23-pin GPIOs					
GPIO2 Group Enable: Logic Device 9, CR30[2] Data: Logic Device 9, E0~E3 Multi-function: WDTO, SMI, BEEP, GRN, OVT (Logic Device 9, CRE9[0~7]) Reset: Logic Device A, CRE9[2] OD/PP: Logic Device F, CRE1					
Name	**Pin**	**Default function**	**Default type**	**GPIO power plane**	**Switch default function to GPIO**
GP20	27	KDAT	Bi-direction	3VSB	CR2A[0]=1
GP21	26	KCLK	Bi-direction	3VSB	
GP22	25	MDAT	Bi-direction	3VSB	CR2A[1]=1
GP23	24	MCLK	Bi-direction	3VSB	
GP24	46	CIRRX	Input	3VSB	CR27[3]=0, CR1B[4]=0
GP25	47	CIRTX	Output	3VSB	
GP26	58	TSIC	Input	3VSB	CR2C[0]=0
GPIO4 Group Enable: Logic Device 9, CR30[4] Data: Logic Device 9, F0~F2, E8 Multi-function: SMI, BEEP (Logic Device 9, CREE[0~7]) Reset: Logic Device A, CRE9[4]					

OD/PP: Logic Device F, CRE3

Name	Pin	Default function		Default type		GPIO power plane	Switch default function to GPIO
GP41	23	{ LPT_EN }		{ LPT_EN }		3VSB	CR1A[3:2]=10, LPT_EN=0
		0	MSCL	0	Input		
		1	INIT#	1	Otput		
GP42	22	{ LPT_EN }		{ LPT_EN }		3VSB	CR1B[2:1]=11, LPT_EN=0
		0	MSDA	0	Input		
		1	SLIN#	1	Output		
		0	GRN_LED	0	Output		
		1	BUSY	1	Input		

GPIO5 Group
Enable: Logic Device 9, CR30[5]
Data: Logic Device 9, F4~F7
Multi-function: WDT, SLPS5_LATCH, GRN, YLW (Logic Device 8, CREB[0~7])
Reset: Logic Device A, CRE9[5]
OD/PP: Logic Device F, CRE4

Name	Pin	Default function		Default type		GPIO power plane	Switch default function to GPIO
GP54	44	{ DSW_EN }		{ DSW_EN }		3VSB	
		0	GP54	0	Input		
		1	SLP_SUS#	1	Input		
GP55	43	{ DSW_EN }		{ DSW_EN }		3VSB	
		0	GP55	0	Input		
		1	SLP_SUS_FET	1	Output		
GP56	42	{ AMDPWR_EN }		{ AMDPWR_EN }		3VSB	Strapping by AMDPWR_EN or CR2F[5]
		0	GP56	0	Input		
		1	VCORE_EN	1	Output (OD)		
GP57	41	{ AMDPWR_EN }		{ AMDPWR_EN }		3VSB	
		0	GP57	0	Input		
		1	VLDT_EN	1	Output (OD)		

GPIO7 Group
Enable: Logic Device 9, CR30[7]
Data: Logic Device 7, E0~E3
Multi-function: GRN, BEEP (Logic Device 7, CREC[0~3])
Reset: Logic Device A, CRE5[4]
OD/PP: Logic Device F, CRE6

Name	Pin	Default function	Default type	GPIO power plane	Switch default function to GPIO
GP74	36	RSTOUT0#	Output	3VSB	CR2B[5]=1

GP75	35	RSTOUT1#	Output	3VSB	CR2B[6]=1

GPIO8 Group
Enable: Logic Device 9, CR30[0]
Data: Logic Device 7, E4~E7
Multi-function: YLW, BEEP, SMI, WDTO (Logic Device 7, CRED[0~6])
Reset: Logic Device A, CRE5[5]
OD/PP: Logic Device F, CRE7

Name	Pin	Default function		Default type		GPIO power plane	Switch default function to GPIO
GP80	13	GP80		Input		3VSB	
GP81	14	GP81		Input		3VSB	
GP82	15	GP82		Input		3VSB	
GP83	16	GP83		Input		3VSB	
GP84	17	GP84		Input		3VSB	
GP85	18	{ UARTP80_EN }		{ UARTP80_EN }		3VSB	
		0	GP85	0	Input		
		1	SOUTA_P80	1	Output		
GP86	19	GP86		Input		3VSB	
GP87	20	GP87		Input		3VSB	

17.2 ACCESS CHANNELS

There are two different channels to set up/access the GPIO ports. The first one is the indirect access via register 2E/2F (4E/4F, it depends by HEFRAS trapping). The registers can be read / written only when the respective logical device ID and port number are selected.

The other is the direct access through GPIO register table that can be configured by {CR61, CR60} of logic device 8. The mapped 7 registers are defined in table 17-3. Base address plus 0 to 4 are GPIO registers, base address plus 5 and 6 are watchdog registers.Since the base address is set, the GPIO number can be selected by writing the group number to GSR [INDEX] (GPIO Select Register, #0~#7 for GPIO0 ~ GPIO7 respectively). Then the I/O register, the Data register and the Inversion register are mapped to addresses Base+0, Base+1 and Base+2 respectively. Only one GPIO can be accessed at one time.

Table 17-3 GPIO Register Addresses

ADDRESS	ABBR	BIT NUMBER							
		7	6	5	4	3	2	1	0
Base + 0	GSR	Reserved				INDEX			
Base + 1	IOR	GPIO I/O Register							
Base + 2	DAT	GPIO Data Register							
Base + 3	INV	GPIO Inversion Register							
Base + 4	DST	GPIO Status Register							
Base + 5	Wdtmod	Watchdog Timer I (WDT1) and KBC P20 Control Mode Register							
Base + 6	Wdttim	Watchdog Timer I (WDT1) Control Register							

18. SMBUS MASTER INTERFACE

18.1 General Description

The SMBus interface module is two wire serial interface compatible to the SMBus physical layer. It is also compatible with Intel's SMBus and Philips' I^2C bus.

The rest of this section introduces the various features of the SMBus master capability. These features are divided into the following sections:

- SMBus and I^2C compliant
- AMD-TSI
- PCH
- SMBus master

18.2 Introduction to the SMBus Master

18.2.1 Data Transfer Format

Every byte transferred on the bus consists of 8 bits. After the start condition, the master places the 7-bit address to the slave device it wants to address on the bus. The address followed an eight bit indicating the direction of the data transfer (R/W#); a zero indicates a transmission for data while a one indicates a request for data. Each byte is transferred with the most significant bit first, and after each byte, an acknowledge signal must follow. A data transfer is always terminated by stop condition generated by master.

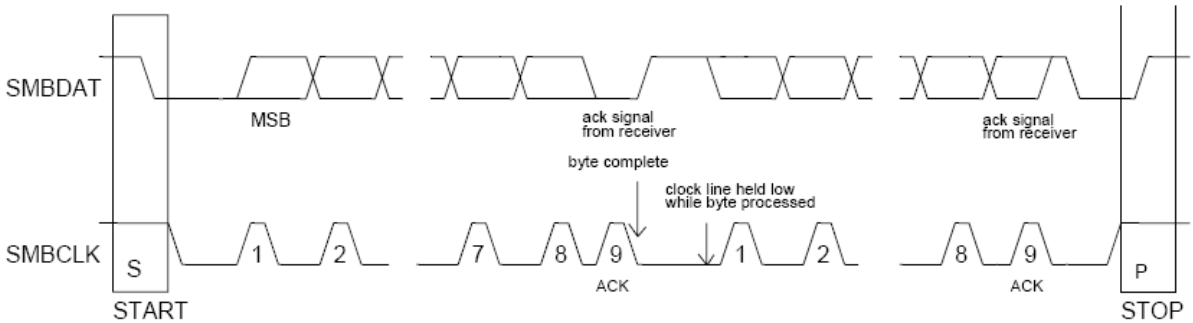

Figure 18-1 Data Transfer Format

18.2.2 Arbitration

Arbitration takes place on the SMBDAT data line while the SMBCLK line is high. Two devices may generate a start condition at the same time and enter the arbitration procedure. Arbitration continues until one master generates a HIGH level on the SMBDAT line while another competing master generates a LOW level on the SMBDAT line while SMBCLK is high. The master device which generated the HIGH level on SMBDAT loses arbitration. If a device loses arbitration during the first byte following a start condition i.e. while transmitting a slave address it becomes a slave receiver and monitors the address for a potential match. Arbitration may also be lost in the master receive mode during the acknowledge cycle.

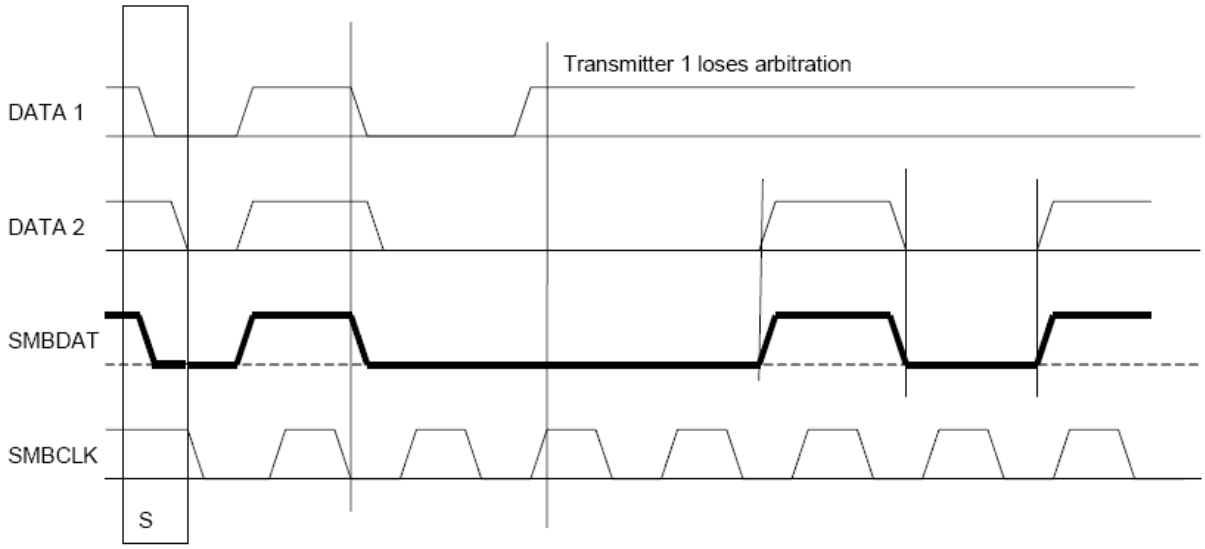

Figure 18-2 SMBus Arbitration

18.2.3 Clock Synchronization

Clock synchronization is performed while the arbitration procedure described above is in effect. Clock Synchronization takes place between two competing devices by utilizing the wired-AND nature of the SMBCLK line. The SMBCLK line will go low as soon as the master with the shortest high time pulls SMBCLK low. SMBCLK will remain low until the device with the longest SMBCLK low time relinquishes the SMBCLK line. Therefore the SMBCLK high time is determined by device with the shortest high time while the SMBCLK low time is determined by the device with the longest low time.

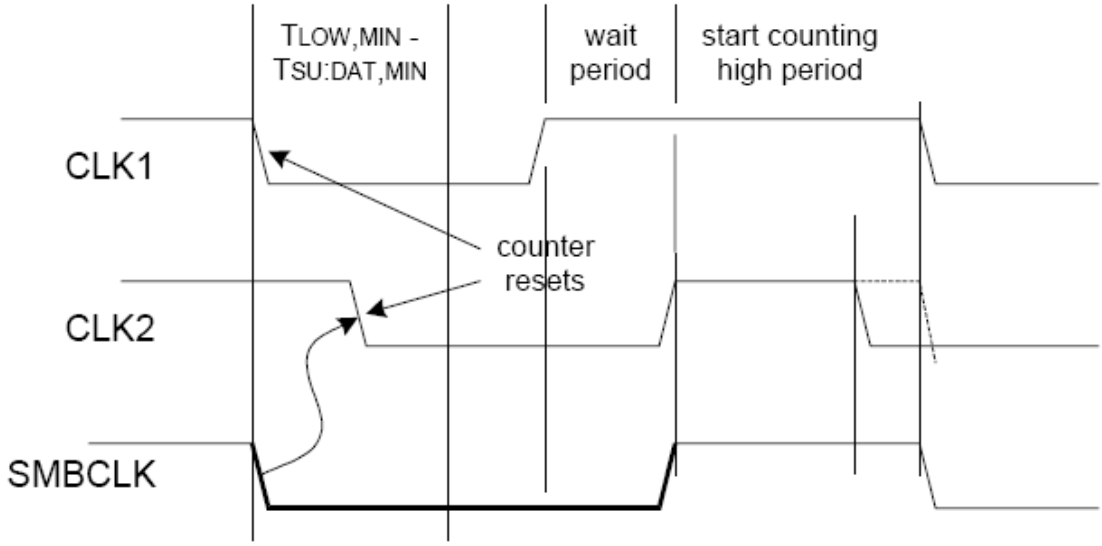

Figure 18-3 Clock synchronization

18.3 SB-TSI

The combined-format repeated start sequence is not supported in standard-mode and fast-mode.

- Only 7-bit SMBus addresses are supported.
- SB-TSI implements the Send/Receive Byte and Read/Write Byte protocols.
- SB-TSI registers can only by written using a write byte command.
- Address Resolution Protocol (ARP) is not implemented.
- Packet Error Checking (PEC) is not supported.

18.3.1 SB-TSI Address

The SMBus address is really 7 bits. The SB-TSI address is normally 98h or 4Ch. The address could vary with address select bits.

Table 18-1 SB-TSI Address Encoding

Address Select Bits	SB-TSI Address
000b	98h
001b	9Ah
010b	9Ch
011b	9Eh
100b	90h
101b	92h
110b	94h
111b	96h

18.4 PCH

The PCH provide system thermal data to EC. The EC can manage the fans and other cooling elements based on this data. A subset of the thermal collection is that the PCH and be programmed to alert the EC when a device has gone outside of its temperature limits.

18.4.1 Command Summary

Table 18-2 PCH Command Summary

Trans-action	Slave Addr.	Data Byte 0 =Com mand	Data Byte 1 =Byte Count	Data Byte 2	Data Byte 3	Data Byte 4	Data Byte 5	Data Byte 6	Data Byte 7
Write STS Preferences	I2C	0x41	0x6	STS [47:40]	STS [39:32]	STS [31:24]	STS [23:16]	STS [15:8]	STS [7:0]
Write CPU Temp Limits	I2C	0x42	0x6	Lower Limit [15:8]	Lower Limit [7:0]	Upper Limit [15:8]	Upper Limit [15:8]		
Write MCH Temp Limits	I2C	0x43	0x2	Lower Limit [7:0]	Upper Limit [7:0]	na	na		

Write IBX Temp Limits	I2C	0x44	0x2	Lower Limit [7:0]	Upper Limit [7:0]	na	na		
Write DIMM Temp Limits	I2C	0x45	0x2	Lower Limit [7:0]	Upper Limit [7:0]	na	na		
Write MPC CPU Power Clamp	I2C	0x50	0x2	Lower Limit [7:0]	Power Clamp [7:0]				
Block Read	Block Read Address	0x40	Block Read Address	Byte Count	Data 0	Data N	PEC (optional)		

18.5 SMBus Master

18.5.1 Block Diagram

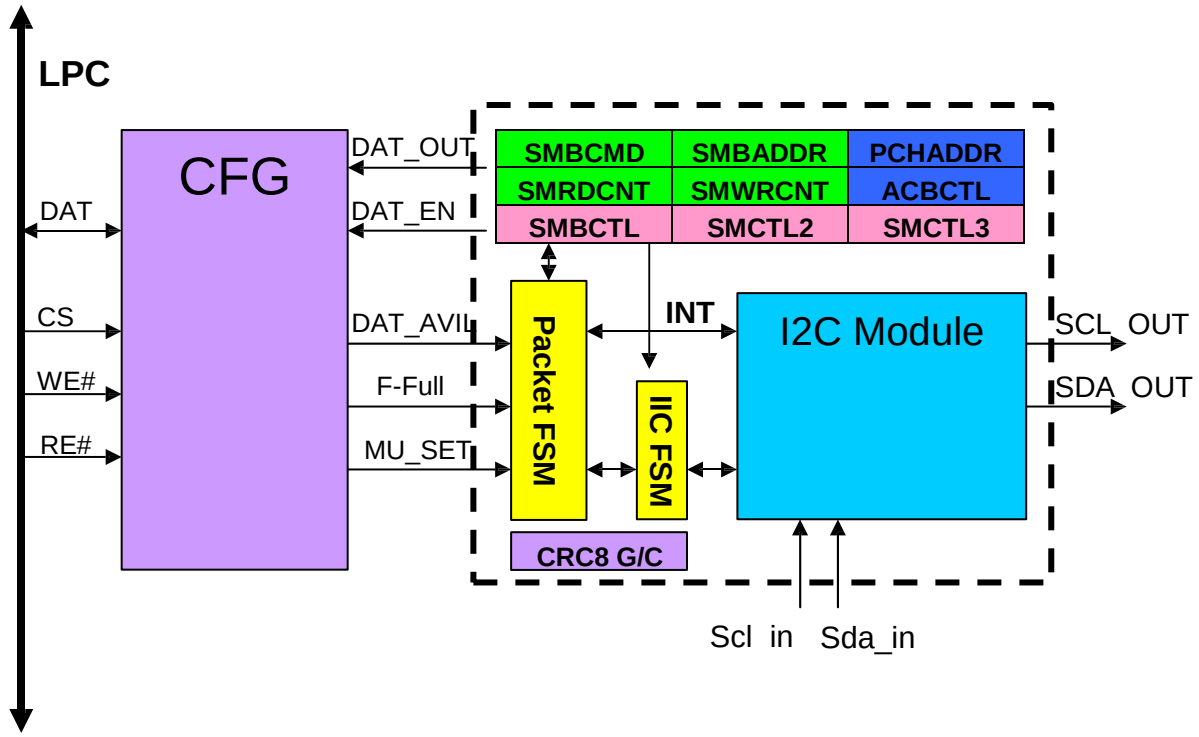

Figure 18-4 SMBus Master Block Diagram

.

18.5.2 Programming Flow

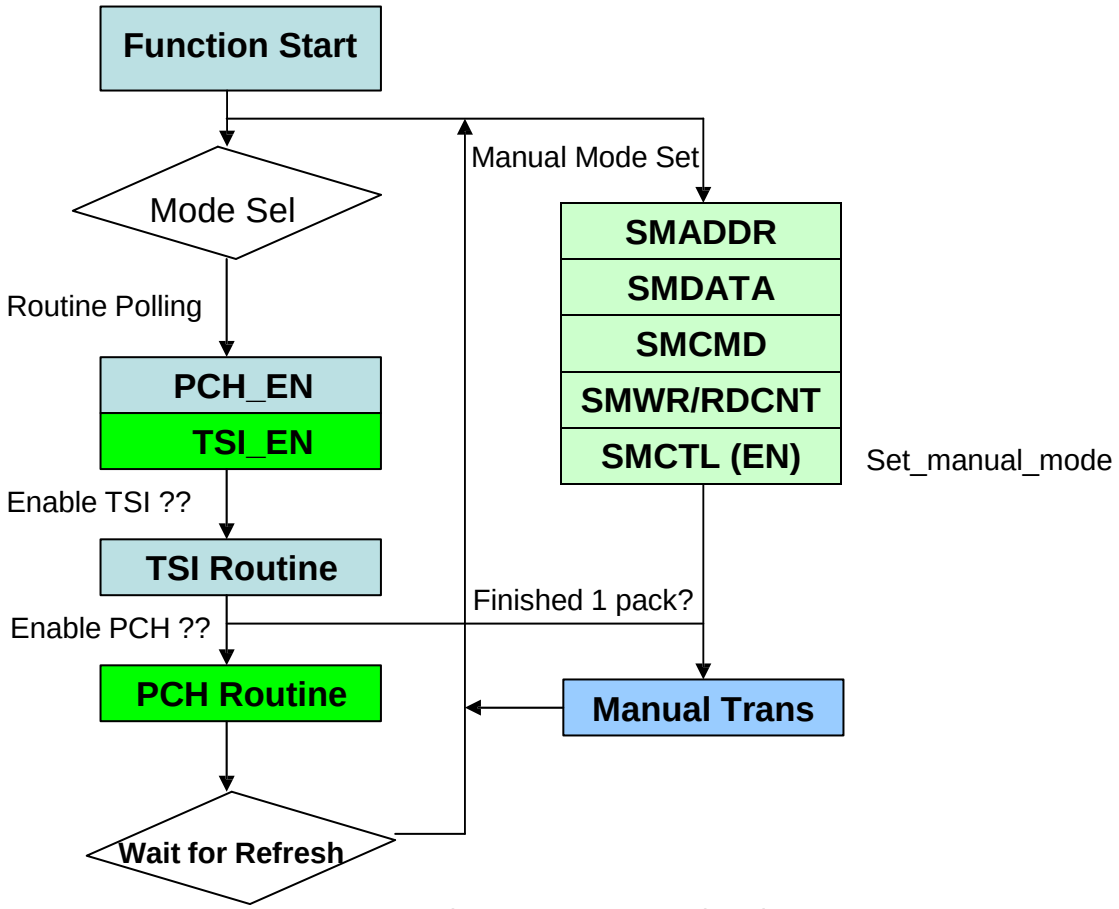

Figure 18-5 Programming Flow

18.5.3 TSI Routine

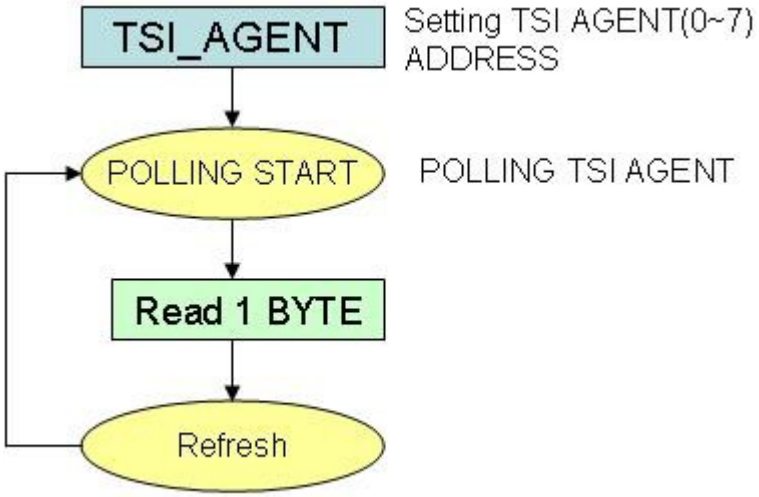

Figure 18-6 TSI Routine

18.5.4 PCH Routine

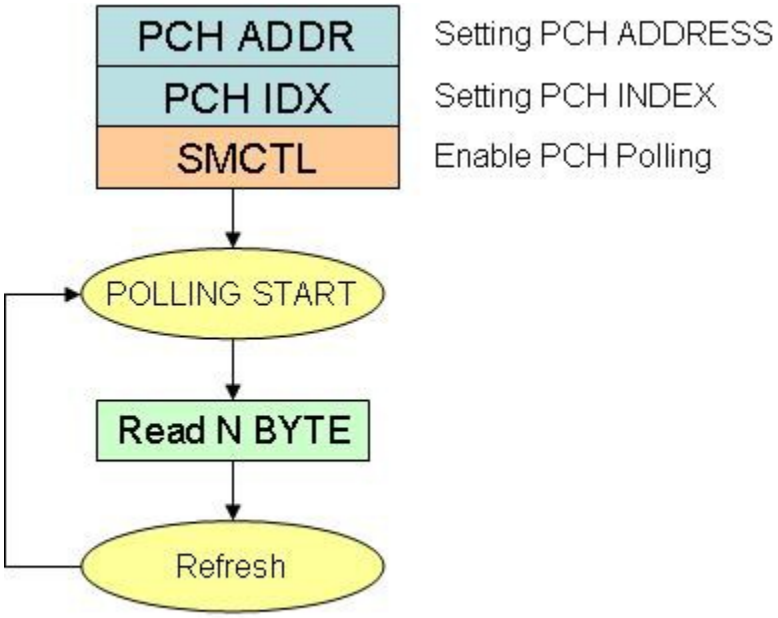

Figure 18-7 PCH Routine

18.5.5 BYTE Ruttine

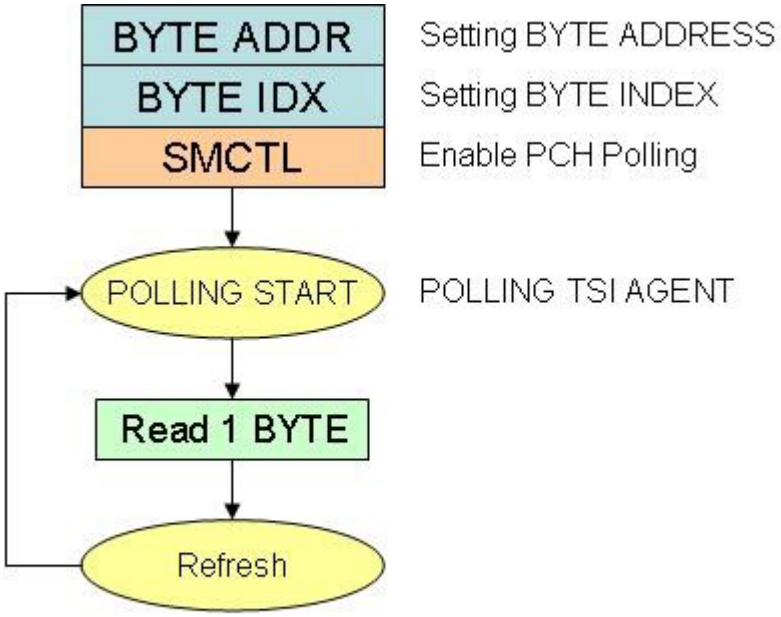

Figure 18-8 PCH Routine

18.5.6 Manual Mode interface

The SMBus host supports Block/Word/Byte Write and Block/Word/Byte read with PEC. The SMBus host can use the interface to access the smbus slave. The timing diagrams below illustrate how to use the smbus interface to write the data or read the data to the smbus slave.

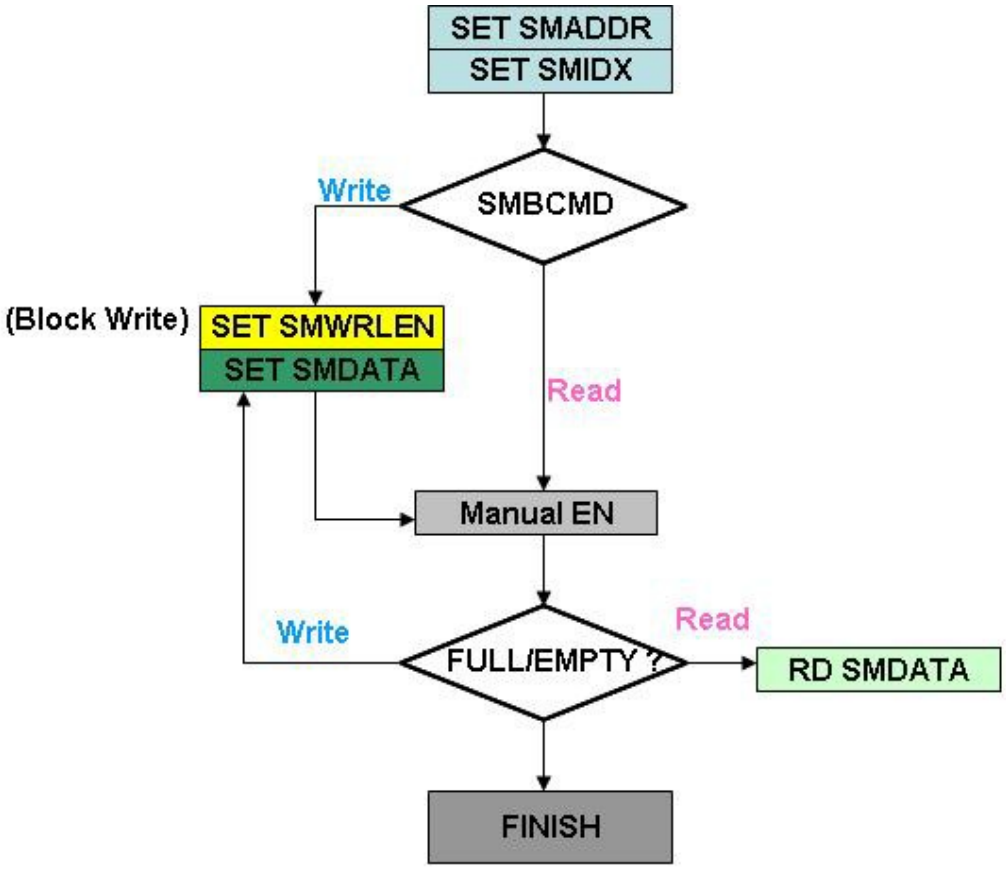

Figure 18-9 Manual Mode Programming Flow

18.6 Register Type Abbreviations

The following abbreviations are used to indicate the Register Type:

- R/W = Read/Write.
- R = Read from register.
- W = Write.
- RO = Read-only.

To program the SMBus master configuration registers, the following configuration procedures must be followed in sequence:

(1). Enter the Extended Function Mode.

(2). Configure the configuration registers.

18.6.1 Enter the Extended Function Mode

To place the chip into the Extended Function Mode, two successive writes of 0x26 must be applied to Extended Function Enable Registers (EFERs, i.e. 2Eh or 4Eh).

18.6.2 Configure the Configuration Registers

The chip selects the Logical Device and activates the desired Logical Devices through Extended Function Index Register (EFIR) and Extended Function Data Register (EFDR). The EFIR is located at the same address as the EFER, and the EFDR is located at address (EFIR+1).

First, write the Logical Device Number (i.e. 0x07) to the EFIR and then write the number of the desired Logical Device to the EFDR. If accessing the Chip (Global) Control Registers, this step is not required.

Secondly, write the address of the desired configuration register within the Logical Device to the EFIR and then write (or read) the desired configuration register through the EFDR.

18.7 SMBus Master Register Set

18.7.1 SMBus Register Map

SMBus Master base address in register Logic Device B CR62h(MSB), CR63h(LSB).

Table 18-3 SMBus Master Bank 0 Registers

Offset	Type	Name	Section
0	R/W	**SMBus Data**	19.7.2
1	R/W	**SMBus Write Data Size**	19.7.3
2	R/W	**SMBus Command**	19.7.4
3	R/W	**SMBus Index**	19.7.5
4	R/W	**SMBus Control**	19.7.6
5	R/W	**SMBus Address**	19.7.7
6	R/W	**SMBCLK Frequency**	19.7.8
7	RO	**Reserved**	--
8	R/W	**PCH Address**	19.7.9
9	R/W	**Error status**	19.7.10
A	R/W	**Reserved**	--
B	R/W	**PCH Command**	19.7.11
D	R/W	**TSI Agent Enable**	19.7.12
E	R/W	**SMBus Control 3 Register**	19.7.13
F	R/W	**SMBus Control 3 Register**	19.7.14
10	R/W	**BYTE_ADDR**	19.7.15
11	R/W	**BYTE Index High Byte**	19.7.16
12	R/W	**BYTE Index Low Byte**	19.7.17
13	R/W	**Reserved**	
14	R/W	**Reserved**	

18.7.2 SMBus Data (SMDATA) – Bank 0

This 32 bits register is the data in and out register of SMBus data register. Before writing to SMDATA register, this register contains the input data, after writing to SMDATA register, this register contains the output data.

Offset: 0h

Type: R/W

Byte	3	2	1	0
Name	**SMFIFO3**	**SMFIFO2**	**SMFIFO1**	**SMFIFO0**
Default	00h	00h	00h	00h

Byte	Description
3	**SMFIFO3 (SMBus FIFO 3).** This byte represents the high byte of the 32 bits SMBus data.
2	**SMFIFO2 (SMBus FIFO 2).** This byte represents the second byte of the 32 bits SMBus data.
1	**SMFIFO1 (SMBus FIFO 1).** This byte represents the first byte of the 32 bits SMBus data.
0	**SMFIFO0 (SMBus FIFO 0).** This byte represents the low byte of the 32 bits SMBus data.

18.7.3 SMBus Write Data Size (SMWRSIZE) – Bank 0

Offset: 1h

Type: R/W

Bit	7	6	5	4	3	2	1	0
Name	**Reserved**			**SMWRSIZE**				
Default	0	0	0	0	0	0	0	0

Bit	Description
7-5	**Reserved.**
4-0	**SMWRSIZE (SMBus Write Byte Counter).** This field sets the write byte counter, the max counter size is 32 bytes, and the minimal size is 1 bytes.

18.7.4 SMBus Command (SMCMD) – Bank 0

Offset: 2h

Type: R/W

Bit	7	6	5	4	3	2	1	0
NAME	REV				SMBus CMD			
Default	0	0	0	0	0	0	0	0

Bit	Description
7-4	**Reserved.**

3-0	**SMBCMD (SMBus Command).** This field sets SMBus Command: 0000 : Read Byte (Default) 0001 : Read Word 0010 : Read Block 0011 : Block Write and Read Process Call 0100 : Process Call 1000 : Write Byte 1001 : Write Word 1010 : Write Block

18.7.5 SMBus INDEX (SMIDX) – Bank 0

Offset: 3h

Type: R/W

Bit	7	6	5	4	3	2	1	0
Name	**SMCMD**							
Default	0	0	0	0	0	0	0	0

Bit	Description
7-0	**SMIDX (SMBus INDEX).** This field represents the index data of the SMBus.

18.7.6 SMBus Control (SMCTL) – Bank 0

Offset: 4h

Type: R/W

Bit	7	6	5	4	3	2	1	0
Name	**MMODE_S**	**S_RST**	**CRC8_EN**	**REFLASH_CLK**			**BYTE_EN**	**PCH_EN**
Default	0	0	0	0	0	0	0	0

Bit	Description
7	**MMODE_S (Manual Mode Set).** 0 : Disable. 1 : Enable.
6	**S_RST (Soft Reset SMBus).** 0 : Disable. 1 : Enable.
5	**CRC8_EN (CRC8 Enable).** 0 : CRC8 function is disable. 1 : CRC8 function is enable.

4-2	**REFRASH_CLK (Refrash Clock Select).** 000, 100 – 128ms 001, 101 – 256ms 010, 110 – 512ms 011, 111 – 64ms (1KHz)
1	**BYTE_EN (BYTE Enable).** 0 : BYTE function is disable. 1 : BYTE function is enable.
0	**PCH_EN (PCH Enable).** 0 : PCH function is disable. 1 : PCH function is enable.

18.7.7 SMBus Address (SMADDR) – Bank 0

Offset: 5h

Type: R/W

Bit	7	6	5	4	3	2	1	0
Name	**SMADDR**							**REV**
Default	0	0	0	0	0	0	0	0

Bit	Description
7-1	**SMADDR (SMBus Address).** AMD-TSI only supports 7-bit SMBus address.
0	**Reserved:** 0 : Write. If the protocol is write, the WR_SIZE can't be zero. (Default)

18.7.8 SCL FREQ (SCLFREQ) – Bank 0

Offset: 6h

Type: R/W

Bit	7	6	5	4	3	2	1	0
	Reserved:				**SCLFREQ**			
Default	0	0	0	0	0	1	1	1

Bit	Description
7-4	Reserved

3-0	**SCLFQ (SMBCLK Frequency).** This field defines the SMBCLK period (low time and high time). The clock low time and high time ate defined as follows: 0000 : 365KHz 0001 : 261KHz 0010 : 200KHz 0011 : 162KHz 0100 : 136KHz 0101 : 117KHz 0110 : 103KHz 0111 : 92KHz (Default) 1000 : 83KHz 1001 : 76KHz 1010 : 71KHz 1011 : 65KHz 1100 : 61KHz 1101 : 57KHz 1110 : 53KHz 1111 : 47KHz

18.7.9 PCH Address (PCHADDR) – Bank 0

Offset: 8h

Type: R/W

Bit	7	6	5	4	3	2	1	0
Name	**PCHADDR**							**REV**
Default	1	0	0	1	0	1	0	0

Bit	Description
7-1	**PCHADDR (PCH Address).** PCH supports 8-bit SMBus address. The default address is 94h. The last bit is read or write bit. It needs to set to “0”.

18.7.10 SMBus Error Status (Error_status) – Bank 0

Offset: 9h

Type: RO/W1C

Bit	7	6	5	4	3	2	1	0
Name	**REV**		**ADNACK**	**Timeout**	**Reserved**	**BER**	**NACK**	**Reserved**
Default	1	0	0	1	0	1	0	0

Bit	Description
7-6	**Reserved.**
5	**ADDR Non ACK.** This bit reflects SMBus occurred ADDRESS NON ACK in Manual mode..
4	**Timeout.** This bit reflects when SMBus occurs timeout.

3	**Reserved.**
2	**BER (Bus Error).** This bit reflects when a start or stop condition is detected during data transfer, or when an arbitration problem is detected.
1	**NACK (Negative acknowledge).** This bit is set by hardware when a transmission is not acknowledged on the ninth clock. While NACK is set SCL will be drive low and subsequent bus transactions are stalled until NACK is cleared.
0	**Reserved.**

18.7.11PCH Command (PCHCMD) – Bank 0

Offset: Bh

Type: R/W

Bit	7	6	5	4	3	2	1	0
Name	**PCHCMD**							
Default	0	1	0	0	0	0	0	0

Bit	Description
7-0	**PCHCMD (PCH Command).** This field represents the command data of the PCH. The default command is block read (40h).

18.7.12TSI Agent Enable Register (TSI_AGENT) – Bank

Offset: Dh

Type: RO

Bit	7	6	5	4	3	2	1	0
Name	AG7	AG6	AG5	AG4	AG3	AG2	AG1	AG0
Default	0	0	0	0	0	0	0	0

Bit	Description
7	**TSI AGENT7 Enable. :** This bit reflects AMD-TSI Agent enbale. 0: Diable 1: Enable
6	**TSI AGENT6 Enable. :** This bit reflects AMD-TSI Agent enbale. 0: Diable 1: Enable
5	**TSI AGENT5 Enable. :** This bit reflects AMD-TSI Agent enbale. 0: Diable 1: Enable
4	**TSI AGENT4 Enable. :** This bit reflects AMD-TSI Agent enbale. 0: Diable 1: Enable

3	**TSI AGENT3 Enable. :** This bit reflects AMD-TSI Agent enbale. 0: Diable 1: Enable
2	**TSI AGENT2 Enable. :** This bit reflects AMD-TSI Agent enbale. 0: Diable 1: Enable
1	**TSI AGENT1 Enable. :** This bit reflects AMD-TSI Agent enbale. 0: Diable 1: Enable
0	**TSI AGENT0 Enable. :** This bit reflects AMD-TSI Agent enbale. 0: Diable 1: Enable

18.7.13SMBus Control 3 Register (SMCTL3) – Bank 0

Offset: Eh

Type: RO

Bit	7	6	5	4	3	2	1	0
Name	**Reserved**				**CRC_CHK**	**M_MODE**	**F_FULL**	**F_EMPT**
Default	0	0	0	0	0	0	0	0

Bit	Description
7-4	**Reserved**
3	**CRC_CHK (CRC Check).** 0 : incorrect 1 : correct
2	**M_MODE (Manual Mode).** 0 : Non-active 1 : Active
1	**F_FULL (fifo_full). :** This bit reflects SMBus data fifo is full. 0 : Non-full 1 : Full
0	**F_EMPT (fifo empty). :** This bit reflects the SMBus data fifo is empty. 0 : Non-empty 1 : Empty

18.7.14SMBus Control 2 Register (SMCTL2) – Bank 0

Offset: Fh

Type: R/W

Bit	7	6	5	4	3	2	1	0
Name	**Reserved**		**INT_LCH_E**	**Reserved**		**BYTE_SEL**	**BANKSEL**	
Default	0	0	0	0	0	0	0	0

Bit	Description
7-6	**Reserved.**
5	**INT_LCH_E (Interrupt Latch Enable). :** This bit will latch the I2CSTA register. 0 : Disable. 1 : Enable.
2	**BYTE_SEL :**This field represents byte polling 8-bit/16bit select bits. 0: BYTE_TEMP is 16 bit data 1: BYTE_TEMP is 8 bit data
1-0	**BANKSEL (Bank Select).** 00 – Bank 0. 01 – Bank 1. 10 – Bank 2.

18.7.15BYTE ADDRESS (BYTE ADDR) – Bank 0

Offset: 10h

Type: R/W

Bit	7	6	5	4	3	2	1	0
Name	**BYTE_ADDRESS**							
Default	0	1	0	0	0	0	0	0

Bit	Description
7-0	**BYTE ADDRESS (BYTE ADDR).** This field represents the address data of the BYTE.

18.7.16BYTE INDEX_H (BYTE_IDX_H) – Bank 0

Offset: 11h

Type: R/W

Bit	7	6	5	4	3	2	1	0
Name	**BYTE_IDX_H**							
Default	0	0	0	0	0	0	0	1

Bit	Description
7-0	**BYTE_IDX_H (High BYTE INDEX).** This field represents the high byte index of the Byte polling. The default command is byte read (01h).

18.7.17BYTE INDEX_L (BYTE_IDX_L) – Bank 0

Offset: 12h

Type: R/W

Bit	7	6	5	4	3	2	1	0
Name	**BYTE_IDX_L**							
Default	0	0	0	1	0	0	0	0

Bit	Description
7-0	**BYTE_IDX_L (LOW BYTE INDEX).** This field represents the low byte index of the Byte polling. The default command is byte read (10h).

The EC may read thermal information from IBX using the SMBus block read command. The IBX doesn't support byte-read or word-read SMBus commands. The read use a different address that the writes. The address must be different so that the IBX knows which target Is intended, either the I2C target or the block read buffer.

The IBX and EC are set up by BIOS with the length of the read that is supported by the platform. The EC must always do reads of the lengths set up by BIOS. There is no way to change the length of the read after BIOS has set things up.

An EC that only wants the single highest temperature among MCH, and CPU could read one byte. A 2 byte read would provide both IBX and CPU/MCH package temperature. An EC that wanted each components temperature would do a 4 byte read. An EC that also wanted DIMM information would read 9 bytes. If an EC wanted to read the HOST STS status, it must read 19 bytes. An EC can also read the energy data provided by the CPU by reading 12 bytes.

19. CONFIGURATION REGISTER

19.1 Chip (Global) Control Register

Default Value of Global Control Register:

Register	Default	Register	Default	Register	Default
CR 07h	00h	CR 20h	C5h (ID_H)	CR 2Bh	00h
CR 10h	FFh	CR 21h	61h (ID_L)	CR 2Ch	01h
CR 11h	FFh	CR 22h	FFh	CR 2Fh	0ss0ssssb
CR 13h	00h	CR 24h	04h		
CR 14h	00h	CR 25h	00h		
CR 1Ah	00h	CR 26h	0s000000b		
CR 1Bh	70h	CR 27h	00h		
CR 1Ch	10h	CR 28h	00h		
CR 1Dh	00h	CR 2Ah	C0h		

Note. The value of “s” means hardware strapping result: strapping high will report 1; strapping low will report 0.
In addition, BIOS can write the value of strapping result after hardware strapping.
Note. The CR21h is low-byte of the Chip-ID; the “X” means IC version. EX. 61=A version, 62=B version, 63=C version.

Reserved Registers of Global Control Register:

Register	Default	Register	Default
CR 02h	00h	CR 1Eh	FFh
CR 12h	FFh	CR 1Fh	FFh
CR 15h	FFh	CR 23h	00h
CR 16h	FFh	CR 29h	FFh
CR 17h	FFh	CR 2Dh	FFh
CR 18h	FFh	CR 2Eh	00h
CR 19h	FFh		

Note. All reserved registers must keep default value.
Note. Before accessing CR10, CR11, CR13 and CR14, CR26 [Bit4] must be set to logic 1.

CR 07h. Logical Device Selection

Attribute: Read/Write
Power Well: VCC
Reset by: LRESET#
Default : 00h

BIT	READ / WRITE	DESCRIPTION
7-0	R / W	Logical Device Number.

CR 10h. Device IRQ TYPE Selection

Attribute: Read/Write
Power Well: VCC
Reset by: LRESET#
Default : FFh

BIT	READ / WRITE	DESCRIPTION
7-6	Reserved.	
5	R / W	UARTA IRQ TYPE SELECT (note1.) 0: Edge. 1: Level.
4	Reserved	
3	R / W	KBC IRQ TYPE SELECT (note1.) 0: Edge. 1: Level.
2	R / W	MOUSE IRQ TYPE SELECT (note1.) 0: Edge. 1: Level.
1	R / W	CIR IRQ TYPE SELECT (note1.) 0: Edge. 1: Level.
0	R / W	CIRWAKUP IRQ TYPE SELECT (note1.) 0: Edge. 1: Level.

Note1: Before accessing CR10, CR11, CR13 and CR14, CR26 [Bit4] must be set to logic 1.

CR 11h. Device IRQ TYPE Selection

Attribute: Read/Write
Power Well: VCC
Reset by: LRESET#
Default : FFh

BIT	READ / WRITE	DESCRIPTION
7	R / W	HM IRQ TYPE SELECT (note1.) 0: Edge. 1: Level.
6	R / W	WDTO IRQ TYPE SELECT (note1.) 0: Edge. 1: Level.
5-2	Reserved.	
1	R / W	SMI IRQ TYPE SELECT (note1.) 0: Edge. 1: Level.
0	Reserved.	

Note1: Before accessing CR10, CR11, CR13 and CR14, CR26 [Bit4] must be set to logic 1.

CR 13h. Device IRQ Polarity Selection

Attribute: Read/Write
Power Well: VCC
Reset by: LRESET#
Default : 00h

BIT	READ / WRITE	DESCRIPTION
7-0	R / W	IRQ Channel<15:8> Polarity (note1.) 0: High. 1: Low.

Note1: Before accessing CR10, CR11, CR13 and CR14, CR26 [Bit4] must be set to logic 1.

CR 14h. Device IRQ Polarity Selection

Attribute: Read/Write
Power Well: VCC
Reset by: LRESET#
Default : 00h

BIT	READ / WRITE	DESCRIPTION
7-0	R / W	IRQ Channel<7:0> Polarity (note1.) 0: High. 1: Low.

Note1: Before accessing CR10, CR11, CR13 and CR14, CR26 [Bit4] must be set to logic 1.

CR 1Ah. Multi Function Selection

Attribute: Read/Write
Power Well: VSB
Reset by: RSMRST#
Default : 00h

BIT	READ / WRITE	DESCRIPTION
7-4	Reserved	
3-2	R / W	**Pin23** function selection

TEST MODE1	CR1A [Bit3-2]	Pin23
1	xx	Reserved
0	00	MSCL
0	01	SCL
0	10	GP41
0	11	MSCL

1-0	Reserved.

CR 1Bh. Multi Function Selection

Attribute: Read/Write

Power Well: VSB

Reset by: RSMRST#

Default : 70h

BIT	READ / WRITE	DESCRIPTION
7-5	Reserved	
4	R / W	**Pin46** function selection CR1B [Bit4] / CR27 [Bit3] / Pin46 1 / x / CIRRX 0 / 0 / GP24 0 / 1 / IRRX1
3	Reserved	
2-1	R / W	**Pin22** function selection TEST MODE1 / CR1B [Bit2-1] / Pin22 1 / x / Reserved 0 / 00 / MSDA 0 / 01 / SDA 0 / 10 / BEEP 0 / 11 / GP42
0	Reserved	

CR 1Ch. Multi Function Selection

Attribute: Read/Write

Power Well: VSB

Reset by: PWROK

Default : 10h

BIT	READ / WRITE	DESCRIPTION
7-0	Reserved	

CR 1Dh. Multi Function Selection

Attribute: Read/Write

Power Well: VSB

Reset by: PWROK

Default : 00h

BIT	READ / WRITE	DESCRIPTION
7-0	Reserved	

CR 20h. Chip ID (High Byte)

Attribute: Read Only

Power Well: VCC
Reset by: None
Default : C5h

BIT	READ / WRITE	DESCRIPTION
7-0	Read Only	Chip ID number = C5h (high byte).

CR 21h. Chip ID (Low Byte)
Attribute: Read Only
Power Well: VCC
Reset by: None
Default : 61h

BIT	READ / WRITE	DESCRIPTION
7-0	Read Only	Chip ID number = 61h (low byte)

CR 22h. Device Power Down
Attribute: Read/Write
Power Well: VCC
Reset by: LRESET#
Default : FFh

BIT	READ / WRITE	DESCRIPTION
7-5	Reserved.	
4	R / W	UARTA Power Down. 0: Powered down. 1: Not powered down.
3-0	Reserved.	

CR 24h. Global Option
Attribute: Read/Write
Power Well: VCC
Reset by: LRESET#
Default : 04h

BIT	READ / WRITE	DESCRIPTION
7-5	Reserved	
4	R / W	Select output type of SYSFANOUT =0 SYSFANOUT is Open-drain. =1 SYSFANOUT is Push-pull.
3	R / W	Select output type of CPUFANOUT =0 CPUFANOUT is Open-drain. =1 CPUFANOUT is Push-pull.
2-1	Reserved.	
0	R / W	PNPCVS => = 0 The compatible PNP address-select registers have default values. = 1 The compatible PNP address-select registers have no default values.

CR 25h. Interface Tri-state Enable

Attribute: Read/Write

Power Well: VCC

Reset by: LRESET#

Default : 00h

BIT	READ / WRITE	DESCRIPTION
7-3	Reserved.	
2	R / W	UARTATRI
1-0	Reserved.	

CR 26h. Global Option s: value by strapping

Attribute: Read/Write

Power Well: VCC

Reset by: LRESET#

Default : 0s000000b

BIT	READ / WRITE	DESCRIPTION
7	Reserved.	
6	R / W	HEFRAS => = 0 Write 87h to location 2E twice. = 1 Write 87h to location 4E twice. The corresponding power-on strapping pin is RTSA# (Pin 15).
5	R / W	LOCKREG => = 0 Enable R/W configuration registers. = 1 Disable R/W configuration registers.
4-2	Reserved.	
1	R / W	DSUALGRQ => = 0 Enable UART A legacy mode for IRQ selection. Then HCR register (base address + 4) bit 3 is effective when selecting IRQ. = 1 Disable UART A legacy mode for IRQ selection. Then HCR register (base address + 4) bit 3 is not effective when selecting IRQ.
0	R / W	DSUBLGRQ => = 0 Enable IR legacy mode for IRQ selection. Then HCR register (base address + 4) bit 3 is effective when selecting IRQ. = 1 Disable IR legacy mode for IRQ selection. Then HCR register (base address + 4) bit 3 is not effective when selecting IRQ.

CR 27h. Global Option

Attribute: Read/Write

Power Well: VSB

Reset by: RSMRST#

Default : 00h

BIT	READ / WRITE	DESCRIPTION

<table>
<tr><th>BIT</th><th>READ / WRITE</th><th>DESCRIPTION</th></tr>
<tr><td>7-4</td><td colspan="2">Reserved.</td></tr>
<tr><td>3</td><td>R / W</td><td>Pin46 function selection
<table>
<tr><th>CR1B [Bit4]</th><th>CR27 [Bit3]</th><th>Pin46</th></tr>
<tr><td>1</td><td>x</td><td>CIRRX</td></tr>
<tr><td>0</td><td>0</td><td>GP24</td></tr>
<tr><td>0</td><td>1</td><td>IRRX1</td></tr>
</table>
Pin47 function selection
<table>
<tr><th>CR2A [Bit3]</th><th>CR27 [Bit3]</th><th>Pin47</th></tr>
<tr><td>1</td><td>x</td><td>CIRTX1</td></tr>
<tr><td>0</td><td>0</td><td>GP25</td></tr>
<tr><td>0</td><td>1</td><td>IRTX1</td></tr>
</table></td></tr>
<tr><td>2</td><td colspan="2">Reserved</td></tr>
<tr><td>1</td><td>R / W</td><td>LV_DETECT_L
0: AMD power sequence detect level and time delay
1: AMD power sequence non detect level but time delay</td></tr>
<tr><td>0</td><td colspan="2">Reserved.</td></tr>
</table>

CR 28h. Global Option

Attribute: Read/Write

Power Well: VCC

Reset by: LRESET#

Default : 00h

BIT	READ / WRITE	DESCRIPTION
7-0	Reserved.	

CR 2Ah. Multi Function Selection

Attribute: Read/Write

Power Well: VSB

Reset by: RSMRST#, GP2X_MRST(Bit0)

Default : C0h

<table>
<tr><th>BIT</th><th>READ / WRITE</th><th>DESCRIPTION</th></tr>
<tr><td>7</td><td>R / W</td><td>Pin13 function selection
<table>
<tr><th>CR2A [Bit7]</th><th>Pin13</th></tr>
<tr><td>0</td><td>CTSA#</td></tr>
<tr><td>1</td><td>GP80</td></tr>
</table></td></tr>
</table>

<table>
<tr><th>BIT</th><th>READ / WRITE</th><th>DESCRIPTION</th></tr>
<tr><td>7</td><td>R / W</td><td>
Pin14 function selection
<table><tr><td>CR2A [Bit7]</td><td>Pin14</td></tr><tr><td>0</td><td>DSRA#</td></tr><tr><td>1</td><td>GP81</td></tr></table>
Pin15 function selection
<table><tr><td>CR2A [Bit7]</td><td>Pin15</td></tr><tr><td>0</td><td>RTSA#</td></tr><tr><td>1</td><td>GP82</td></tr></table>
Pin16 function selection
<table><tr><td>CR2A [Bit7]</td><td>Pin16</td></tr><tr><td>0</td><td>DTRA#</td></tr><tr><td>1</td><td>GP83</td></tr></table>
Pin17 function selection
<table><tr><td>CR2A [Bit7]</td><td>Pin17</td></tr><tr><td>0</td><td>SINA</td></tr><tr><td>1</td><td>GP84</td></tr></table>
Pin18 function selection
<table><tr><td>CR2A [Bit7]</td><td>Pin18</td></tr><tr><td>0</td><td>SOUTA</td></tr><tr><td>1</td><td>GP85</td></tr></table>
Pin19 function selection
<table><tr><td>CR2A [Bit7]</td><td>Pin19</td></tr><tr><td>0</td><td>DCDA#</td></tr><tr><td>1</td><td>GP86</td></tr></table>
Pin20 function selection
<table><tr><td>CR2A [Bit7]</td><td>Pin20</td></tr><tr><td>0</td><td>RIA#</td></tr><tr><td>1</td><td>GP87</td></tr></table>
</td></tr>
<tr><td>6-4</td><td colspan="2">Reserved.</td></tr>
<tr><td>3</td><td>R/W</td><td>
Pin47 function selection
<table><tr><td>CR2A [Bit3]</td><td>CR27 [Bit3]</td><td>Pin47</td></tr><tr><td>1</td><td>x</td><td>CIRTX1</td></tr><tr><td>0</td><td>0</td><td>GP25</td></tr><tr><td>0</td><td>1</td><td>IRTX1</td></tr></table>
</td></tr>
</table>

<table>
<tr><th>BIT</th><th>READ / WRITE</th><th>DESCRIPTION</th></tr>
<tr><td>2</td><td>R/W</td><td>Enable Over Temperature shutdown Protection (OVT#)
= 0 The thermal shutdown function is disabled. (Default)
= 1 Enable thermal shutdown function.
(If set this bit to 1, the relative registers of OVT# event are:
Bank0, CR18 ,Bit6 → SMIOVT1 OVT# (Default SYSTIN)
Bank0, CR4C ,Bit4 → SMIOVT3 OVT# (Default AUXTIN)
Bank0, CR4C ,Bit3 → SMIOVT2 OVT# (Default CPUTIN)
If current temperature exceeds high-limit setting, OVT# event will be triggered and PSON# will inactive immediately.)</td></tr>
<tr><td>1</td><td>R / W</td><td>Pin24 function selection
<table>
<tr><td>CR2A [Bit1]</td><td>Pin24</td></tr>
<tr><td>0</td><td>MCLK</td></tr>
<tr><td>1</td><td>GP23</td></tr>
</table>
Pin25 function selection
<table>
<tr><td>CR2A [Bit1]</td><td>Pin25</td></tr>
<tr><td>0</td><td>MDAT</td></tr>
<tr><td>1</td><td>GP22</td></tr>
</table></td></tr>
<tr><td>0</td><td>R / W</td><td>Pin26 function selection
<table>
<tr><td>CR2A [Bit0]</td><td>Pin26</td></tr>
<tr><td>0</td><td>KCLK</td></tr>
<tr><td>1</td><td>GP21</td></tr>
</table>
Pin27 function selection
<table>
<tr><td>CR2A [Bit0]</td><td>Pin27</td></tr>
<tr><td>0</td><td>KDAT</td></tr>
<tr><td>1</td><td>GP20</td></tr>
</table></td></tr>
</table>

CR 2Bh. Multi Function Selection

Attribute: Read/Write

Power Well: VSB

Reset by: RSMRST#

Default : 00h

<table>
<tr><th>BIT</th><th>READ / WRITE</th><th>DESCRIPTION</th></tr>
<tr><td>7</td><td colspan="2">Reserved</td></tr>
<tr><td>6</td><td>R / W</td><td>Pin35 function selection
<table>
<tr><td>CR2B [Bit6]</td><td>Pin35</td></tr>
<tr><td>0</td><td>RSTOUT1#</td></tr>
<tr><td>1</td><td>GP75</td></tr>
</table></td></tr>
</table>

BIT	READ / WRITE	DESCRIPTION
5	R / W	**Pin36** function selection CR2B [Bit5] – Pin36 0 – RSTOUT0# 1 – GP74
4-0	Reserved.	

CR 2Ch. Multi Function Selection

Attribute: Read/Write

Power Well: VSB

Reset by: RSMRST#

Default : 01h

BIT	READ / WRITE	DESCRIPTION
7-1	Reserved.	
0	R / W	**Pin58** function selection CR2C [Bit0] – Pin58 0 – GP26 1 – TSIC **Pin60** function selection CR2C [Bit0] – Pin60 0 – PECI 1 – TSID

CR 2Fh. Strapping Function Result

Location: Address 2Fh

Attribute: Read/Write

Power Well: VSB

Reset by: RSMRST#(Bit5-2), PWROK(Bit0), LRESET#(Bit6, 1)

Default : by 0ss0_ssss

Size: 8 bits

BIT	READ / WRITE	DESCRIPTION
7-6	Reserved.	
5	R / W	AMDPWR_EN Strapping result reading
4-2	Reserved.	
1	R / W	TEST MODE1 Strapping result reading
0	R / W	24M_48M_SEL Strapping result reading

Note. All Strapping results can be programming by LPC Interface. There are three conditions below:

4) VSB Strapping result can be programming by LPC, and reset by RSMRST#
5) VCC Strapping result can be programming by LPC, and reset by PWROK
6) LRESET Strapping (2E_4E_SEL) : No change

19.2 Logical Device 2 (UART A)

CR 30h.

Attribute: Read/Write
Power Well: VCC
Reset by: LRESET#
Default : 01h

BIT	READ / WRITE	DESCRIPTION
7-1	Reserved.	
0	R / W	0: The logical device is inactive. 1: The logical device is active.

CR 60h, 61h.

Attribute: Read/Write
Power Well: VCC
Reset by: LRESET#
Default : 03h, F8h

BIT	READ / WRITE	DESCRIPTION
7-0	R / W	These two registers select Serial Port 1 I/O base address <100h: FF8h> on 8 bytes boundary.

CR 70h.

Attribute: Read/Write
Power Well: VCC
Reset by: LRESET#
Default : 04h

BIT	READ / WRITE	DESCRIPTION
7-4	Reserved.	
3-0	R / W	These bits select IRQ resource for Serial Port 1.

CR F0h.

Attribute: Read/Write
Power Well: VCC
Reset by: LRESET#
Default : 00h

BIT	READ / WRITE	DESCRIPTION
7	R / W	0: Delay RXCLK for 5 ns for LG issue. 1: No delay of 5 ns for RXCLK.
6	R / W	0: IRQ is the level mode. 1: IRQ is the pulse mode for IRQ sharing function.
5	R / W	0: Using the original RX FIFO Error Indication signal (USR bit 7). 1: Using new RX FIFO Error Indication signal to solve some issues.
4-2	Reserved.	

BIT	READ / WRITE	DESCRIPTION
1-0	R / W	**Bits** **1 0** 0 0: UART A clock source is 1.8462 MHz (24 MHz / 13). 0 1: UART A clock source is 2 MHz (24 MHz / 12). 1 0: UART A clock source is 24 MHz (24 MHz / 1). 0 0: IR clock source is 14.769 MHz (24 MHz / 1.625).

CR F2h.
Attribute: Read/Write
Power Well: VCC
Reset by: LRESET#
Default : 00h

BIT	READ / WRITE	DESCRIPTION
7	R / W	**UARTA_RS485_enable** 0: Disable RS485 auto flow control function for UARTA 1: Enable RS485 auto flow control function for UARTA
6	R / W	**UARTA_RS485_inv_sel** (Available only when CRF2_Bit7=1) 0: Do not invert the behavior of RTSA# pin for RS485 auto flow control. 1: Invert the behavior of RTSA# pin for RS485 auto flow control.
5-0	Reserved.	

19.3 Logical Device 3 (IR)

CR 30h.

Attribute: Read/Write
Power Well: VCC
Reset by: LRESET#
Default : 01h

BIT	READ / WRITE	DESCRIPTION
7-1	Reserved.	
0	R / W	0: The logical device is inactive. 1: The logical device is active.

CR 60h, 61h.

Attribute: Read/Write
Power Well: VCC
Reset by: LRESET#
Default : 02h, F8h

BIT	READ / WRITE	DESCRIPTION
7-0	R / W	These two registers select IR I/O base address <100h: FF8h> on eight-byte boundary.

CR 70h.

Attribute: Read/Write
Power Well: VCC
Reset by: LRESET#
Default : 03h

BIT	READ / WRITE	DESCRIPTION
7-4	Reserved.	
3-0	R / W	These bits select IRQ resource for IR.

CR F0h.

Attribute: Read/Write
Power Well: VCC
Reset by: LRESET#
Default : 00h

BIT	READ / WRITE	DESCRIPTION
7	R / W	0: Delay RXCLK for 5 ns for LG issue. 1: No delay of 5 ns for RXCLK.
6	R / W	0: IRQ is the level mode. 1: IRQ is the pulse mode for IRQ sharing function.
5	R / W	0: Using the original RX FIFO Error Indication signal (USR bit 7). 1: Using new RX FIFO Error Indication signal to solve some issues.

BIT	READ / WRITE	DESCRIPTION
4-2	Reserved.	
1-0	R / W	**Bits** **1 0** 0 0: IR clock source is 1.8462 MHz (24 MHz / 13). 0 1: IR clock source is 2 MHz (24 MHz / 12). 0 0: IR clock source is 24 MHz (24 MHz / 1). 0 0: IR clock source is 14.769 MHz (24 MHz / 1.625).

CR F1h.

Attribute: Read/Write

Power Well: VCC

Reset by: LRESET#

Default : 00h

BIT	READ / WRITE	DESCRIPTION
7	Reserved.	
6	R / W	IRLOCSEL => IR I/O pins' location selection. 0: reserved. 1: Through IRRX / IRTX.
5-3	R / W	IRMODE => IR function mode selection. See the table below.
2	R / W	IR half / full duplex function selection. 0: IR function is Full Duplex. 1: IR function is Half Duplex.
1	R / W	0: IRTX pin of IR function in normal condition. 1: Inverse IRTX pin of IR function.
0	R / W	0: IRRX pin of IR function in normal condition. 1: Inverse IRRX pin of IR function.

IR MODE	IR FUNCTION	IRTX	IRRX
00X	Disable	Tri-state	High
010*	IrDA	Active pulse 1.6 μS	Demodulation into SINB/IRRX
011*	IrDA	Active pulse 3/16 bit time	Demodulation into SINB/IRRX
100	ASK-IR	Inverting IRTX/SOUTB pin	Routed to SINB/IRRX
101	ASK-IR	Inverting IRTX/SOUTB & 500 KHZ clock	Routed to SINB/IRRX
110	ASK-IR	Inverting IRTX/SOUTB	Demodulation into SINB/IRRX
111*	ASK-IR	Inverting IRTX/SOUTB & 500 KHZ clock	Demodulation into SINB/IRRX

Note: The notation is normal mode in the IR function.

19.4 Logical Device 5 (Keyboard Controller)

CR 30h.

Attribute: Read/Write
Power Well: VCC
Reset by: LRESET#
Default : 00h

BIT	READ / WRITE	DESCRIPTION
7-1	Reserved.	
0	R / W	0: The logical device is inactive. 1: The logical device is active.

CR 60h, 61h.

Attribute: Read/Write
Power Well: VCC
Reset by: LRESET#
Default : 00h, 00h

BIT	READ / WRITE	DESCRIPTION
7-0	R / W	These two registers select the first KBC I/O base address <100h: FFFh> on 1-byte boundary.

CR 62h, 63h.

Attribute: Read/Write
Power Well: VCC
Reset by: LRESET#
Default : 00h, 00h

BIT	READ / WRITE	DESCRIPTION
7-0	R / W	These two registers select the second KBC I/O base address <100h: FFFh> on 1 byte boundary.

CR 70h.

Attribute: Read/Write
Power Well: VCC
Reset by: LRESET#
Default : 00h

BIT	READ / WRITE	DESCRIPTION
7-4	Reserved.	
3-0	R / W	These bits select IRQ resource for KINT. (Keyboard interrupt)

CR 72h.

Attribute: Read/Write
Power Well: VCC

Reset by: LRESET#
Default : 00h

BIT	READ / WRITE	DESCRIPTION
7-4	Reserved.	
3-0	R / W	These bits select IRQ resource for MINT. (PS/2 Mouse interrupt)

CR F0h.
Attribute: Read/Write
Power Well: VCC
Reset by: LRESET#
Default : 83h

BIT	READ / WRITE	DESCRIPTION
7-6	R / W	KBC clock rate selection **Bits** **7 6** 0 0: Reserved 0 1: Reserved 1 0: 12MHz 1 1: Reserved
5-3	Reserved.	
2	R / W	0: Port 92 disabled. 1: Port 92 enabled.
1	R / W	0: Gate A20 software control. 1: Gate A20 hardware speed up.
0	R / W	0: KBRST# software control. 1: KBRST# hardware speed up.

19.5 Logical Device 6 (CIR)

CR 30h.

Attribute: Read/Write
Power Well: VCC
Reset by: LRESET#
Default : 00h

BIT	READ / WRITE	DESCRIPTION
7-1	Reserved.	
0	R / W	0: CIR Interface is inactive. 1: CIR Interface is active.

CR 60h, 61h.

Attribute: Read/Write
Power Well: VCC
Reset by: LRESET#
Default : 00h, 00h

BIT	READ / WRITE	DESCRIPTION
7-0	R / W	These two registers select CIR Interface I/O base address <100h: FF8h> on 1 byte boundary.

CR 70h.

Attribute: Read/Write
Power Well: VCC
Reset by: LRESET#
Default : 00h

BIT	READ / WRITE	DESCRIPTION
7-4	Reserved.	
3-0	R / W	These bits select IRQ resource for CIR.

CR F0h.

Attribute: Read/Write
Power Well: VCC
Reset by: LRESET#
Default : 08h

BIT	READ / WRITE	DESCRIPTION
7-4	Reserved.	
3	R/W	CIR wide band filter select 0: Low-pass filter 1: Band-pass filter

BIT	READ / WRITE	DESCRIPTION
2-1	R/W	Timeout margin selection of CIR wide band band-pass filter 00: 200% recording carrier period 01: 100% recording carrier period 10: 50% recording carrier period 11: 25% recording carrier period
0	R/W	Carrier recording mode CIR wide band band-pass filter 0: Second carrier 1: Every carrier

CR F1h.

Attribute: Read/Write
Power Well: VCC
Reset by: LRESET#
Default : 09h

BIT	READ / WRITE	DESCRIPTION
7-6	R / W	Reserved.
5-0	R / W	Highest input period of CIR wide band band-pass filter (unit : us)

CR F2h.

Attribute: Read/Write
Power Well: VCC
Reset by: LRESET#
Default : 32h

BIT	READ / WRITE	DESCRIPTION
7-6	R / W	Reserved.
5-0	R / W	Lowest input period of CIR wide band band-pass filter (unit : us)

CR F3h.

Attribute: Read/Write
Power Well: VCC
Reset by: LRESET#
Default : 00h

BIT	READ / WRITE	DESCRIPTION
7-6	R / W	Reserved.
5-0	R / W	Recording carrier period of CIR wide band band-pass filter (unit : us)

19.6 Logical Device 7 (GPIO7, GPIO8)

CR E0h. GPIO7 I/O Register

Attribute: Read/Write
Power Well: VSB
Reset by: GP7X_MRST
Default : 0Fh

BIT	READ / WRITE	DESCRIPTION
7-4	Reserved	
3-0	R / W	GPIO7 I/O register 0: The respective GPIO7 PIN is programmed as an output port 1: The respective GPIO7 PIN is programmed as an input port.

CR E1h. GPIO7 Data Register

Attribute: Read/Write
Power Well: VSB
Reset by: GP7X_MRST
Default : 00h

BIT	READ / WRITE	DESCRIPTION
7-4	Reserved	
3-0	R / W	GPIO7 Data register For output ports, the respective bits can be read/written and produced to pins.
	Read Only	For input ports, the respective bits can be read only from pins. Write accesses will be ignored.

CR E2h. GPIO7 Inversion Register

Attribute: Read/Write
Power Well: VSB
Reset by: GP7X_MRST
Default : 00h

BIT	READ / WRITE	DESCRIPTION
7-4	Reserved	
3-0	R / W	GPIO7 Inversion register 0: The respective bit and the port value are the same. 1: The respective bit and the port value are inverted. (Both Input & Output ports)

CR E3h. GPIO7 Status Register

Attribute: Read Only
Power Well: VSB
Reset by: GP7X_MRST
Default : 00h

BIT	READ / WRITE	DESCRIPTION
7-4	Reserved	
3-0	Read Only Read-Clear	GPIO7 Event Status Bit 7-0 corresponds to GP77-GP70, respectively. 0 : No active edge (rising/falling) has been detected 1 : An active edge (rising/falling) has been detected Read the status bit clears it to 0.

CR E4h. GPIO8 I/O Register

Location: Address E4h
Attribute: Read/Write
Power Well: VSB
Reset by: GP8X_MRST
Default : FFh
Size: 8 bits

BIT	READ / WRITE	DESCRIPTION
7-0	R / W	GPIO8 I/O register 0: The respective GPIO8 PIN is programmed as an output port 1: The respective GPIO8 PIN is programmed as an input port.

CR E5h. GPIO8 Data Register

Location: Address E5h
Attribute: Read/Write
Power Well: VSB
Reset by: GP8X_MRST
Default : 00h
Size: 8 bits

BIT	READ / WRITE	DESCRIPTION
7-0	R / W	GPIO8 Data register For output ports, the respective bits can be read/written and produced to pins.
	Read Only	For input ports, the respective bits can be read only from pins. Write accesses will be ignored.

CR E6h. GPIO8 Inversion Registe

Location: Address E6h
Attribute: Read/Write
Power Well: VSB
Reset by: GP8X_MRST
Default : 00h
Size: 8 bits

BIT	READ / WRITE	DESCRIPTION

BIT	READ / WRITE	DESCRIPTION
7-0	R / W	GPIO8 Inversion register 0: The respective bit and the port value are the same. 1: The respective bit and the port value are inverted. (Both Input & Output ports)

CR E7h. GPIO8 Status Register

Location: Address E7h
Attribute: Read Only
Power Well: VSB
Reset by: GP8X_MRST
Default : 00h
Size: 8 bits

BIT	READ / WRITE	DESCRIPTION
7-0	Read Only Read-Clear	GPIO8 Event Status Bit 7-0 corresponds to GP87-GP80, respectively. 0 : No active edge (rising/falling) has been detected 1 : An active edge (rising/falling) has been detected Read the status bit clears it to 0.

CR ECh. GPIO7 Multi-function Select Register

Attribute: Read/Write
Power Well: VSB
Reset by: GP7X_MRST
Default : 00h

BIT	READ / WRITE	DESCRIPTION
7-6	Reserved	
5	R / W	0: GPIO75 1: GPIO75 Æ BEEP (Please also set this GPIO to “output” type.)
4	R / W	0: GPIO74 1: GPIO74 Æ GRN (Please also set this GPIO to “output” type.)
3-0	Reserved	

CR EDh. GPIO8 Multi-function Select Register

Location: Address EDh
Attribute: Read/Write
Power Well: VSB
Reset by: GP8X_MRST
Default : 00h
Size: 8 bits

BIT	READ / WRITE	DESCRIPTION
7	R / W	0: GPIO87 1: GPIO87 Æ YLW

BIT	READ / WRITE	DESCRIPTION
6	R / W	0: GPIO86 1: GPIO86 Æ BEEP
5	R / W	0: GPIO85 1: GPIO85 Æ SMI
4	R / W	0: GPIO84 1: GPIO84 Æ WDTO
3	R / W	0: GPIO83 1: GPIO83 Æ YLW
2	R / W	0: GPIO82 1: GPIO82 Æ BEEP
1	R / W	0: GPIO81 1: GPIO81 Æ SMI
0	R / W	0: GPIO80 1: GPIO80 Æ WDTO

19.7 Logical Device 8 (WDT1)

CR 30h.

Attribute: Read/Write
Power Well: VCC
Reset by: LRESET#
Default : 00h

BIT	READ / WRITE	DESCRIPTION
7-4	Reserved	
3	R / W	0: GPIO Base Address mode is inactive 1: GPIO Base Address mode is active
2-1	Reserved	
0	R / W	0: WDT1 is inactive. 1: WDT1 is active.

CR 60h, 61h.

Attribute: Read/Write
Power Well: VCC
Reset by: LRESET#
Default : 00h, 00h

BIT	READ / WRITE	DESCRIPTION
7-0	R / W	These two registers select GPIO Interface I/O base address <100h: FF8h> on 1 byte boundary.

CR F5h. Watchdog Timer I (WDT1) and KBC P20 Control Mode Register

Attribute: Read/Write
Power Well: VCC
Reset by: LRESET# or PWROK(see LDA E7[3])
Default : 00h

BIT	READ / WRITE	DESCRIPTION
7-5	Reserved.	
4	R / W	Watchdog Timer I count mode is 1000 times faster. 0: Disable. 1: Enable. (If bit-3 is 0, the count mode is 1/1000 seconds mode.) (If bit-3 is 1, the count mode is 1/1000 minutes mode.)
3	R / W	Select Watchdog Timer I count mode. 0: Second Mode. 1: Minute Mode.
2	R / W	Enable the rising edge of a KBC reset to issue a time-out event. 0: Disable. 1: Enable.

BIT	READ / WRITE	DESCRIPTION
1	R / W	Disable / Enable the Watchdog Timer I output low pulse to the KBRST# pin 0: Disable. 1: Enable.
0	R / W	Pulse or Level mode select 0: Pulse mode 1: Level mode

CR F6h. Watchdog Timer I (WDT1) Counter Register

Attribute: Read/Write

Power Well: VCC

Reset by: LRESET# or PWROK(see LDA E7[3])

Default : 00h

BIT	READ / WRITE	DESCRIPTION
7-0	R / W	Watch Dog Timer I Time-out value. Writing a non-zero value to this register causes the counter to load the value into the Watch Dog Counter and start counting down. If CR F7h, bits 7 and 6 are set, any Mouse Interrupt or Keyboard Interrupt event causes the previously-loaded, non-zero value to be reloaded to the Watch Dog Counter and the count down resumes. Reading this register returns the current value in the Watch Dog Counter, not the Watch Dog Timer Time-out value. 00h: Time-out Disable 01h: Time-out occurs after one cycle time, the cycle time is base on LD8 CRF5, bit[3], by analogy.

CR F7h. Watchdog Timer I (WDT1) Control & Status Register

Attribute: Read/Write

Power Well: VCC

Reset by: LRESET# or PWROK(see LDA E7[3])

Default : 00h

BIT	READ / WRITE	DESCRIPTION
7	R / W	Mouse interrupt reset enables watch-dog timer reload 0: Watchdog Timer I is not affected by mouse interrupt. 1: Watchdog Timer I is reset by mouse interrupt.
6	R / W	Keyboard interrupt reset enables watch-dog timer reload 0: Watchdog Timer I is not affected by keyboard interrupt. 1: Watchdog Timer I is reset by keyboard interrupt.
5	Write “1” Only	Trigger Watchdog Timer I event. This bit is self-clearing.
4	R / W Write “0” Clear	Watchdog Timer I status bit 0: Watchdog Timer I is running. 1: Watchdog Timer I issues time-out event.
3-0	R / W	These bits select the IRQ resource for the Watchdog Timer I

19.8 Logical Device 9 (GPIO2, GPIO4, GPIO5, GPIO7, GPIO8)

CR 30h.

Attribute: Read/Write
Power Well: VSB
Reset by: RSMRST#
Default : 00h

BIT	READ / WRITE	DESCRIPTION	
7	R / W	0: GPIO7 is inactive.	1: GPIO7 is active
6	Reserved		
5	R / W	0: GPIO5 is inactive.	1: GPIO5 is active.
4	R / W	0: GPIO4 is inactive.	1: GPIO4 is active.
3	Reserved		
2	R / W	0: GPIO2 is inactive.	1: GPIO2 is active.
1	Reserved		
0	R / W	0: GPIO8 is inactive.	1: GPIO8 is active.

CR E0h. GPIO2 I/O Register

Attribute: Read/Write
Power Well: VSB
Reset by: GP2X_MRST
Default : FFh

BIT	READ / WRITE	DESCRIPTION
7-0	R / W	GPIO2 I/O register 0: The respective GPIO2 PIN is programmed as an output port 1: The respective GPIO2 PIN is programmed as an input port.

CR E1h. GPIO2 Data Register

Attribute: Read/Write
Power Well: VSB
Reset by: GP2X_MRST
Default : 00h

BIT	READ / WRITE	DESCRIPTION
7-0	R / W	GPIO2 Data register For output ports, the respective bits can be read and written by the pins.
	Read Only	For Input ports, the respective bits can only be read by the pins. Write accesses are ignored.

CR E2h. GPIO2 Inversion Register

Attribute: Read/Write
Power Well: VSB
Reset by: GP2X_MRST

Default : 00h

BIT	READ / WRITE	DESCRIPTION
7-0	R / W	GPIO2 Inversion register 0: The respective bit and the port value are the same. 1: The respective bit and the port value are inverted. (Applies to both input and output ports)

CR E3h. GPIO2 Status Register

Attribute: Read Only

Power Well: VSB

Reset by: GP2X_MRST

Default : 00h

BIT	READ / WRITE	DESCRIPTION
7-0	Read Only Read-Clear	GPIO2 Event Status Bit 7-0 corresponds to GP27-GP20, respectively. 0 : No active edge (rising/falling) has been detected 1 : An active edge (rising/falling) has been detected Read the status bit clears it to 0.

CR E9h. GPIO2 Multi-function Select Register

Attribute: Read/Write

Power Well: VSB

Reset by: GP2X_MRST

Default : 00h

BIT	READ / WRITE	DESCRIPTION
7	Reserved	
6	R / W	0: GPIO26 1: GPIO26 Æ BEEP (Please also set this GPIO to “output” type.)
5	R / W	0: GPIO25 1: GPIO25 Æ SMI (Please also set this GPIO to “output” type.)
4	R / W	0: GPIO24 1: GPIO24 Æ OVT (Please also set this GPIO to “output” type.)
3	R / W	0: GPIO23 1: GPIO23 Æ GRN (Please also set this GPIO to “output” type.)
2	R / W	0: GPIO22 1: GPIO22 Æ BEEP (Please also set this GPIO to “output” type.)
1	R / W	0: GPIO21 1: GPIO21 Æ SMI (Please also set this GPIO to “output” type.)
0	R / W	0: GPIO20 1: GPIO20 Æ WDTO (Please also set this GPIO to “output” type.)

CR EBh. GPIO5 Multi-function Select Register

Attribute: Read/Write
Power Well: VSB
Reset by: GP5X_MRST
Default : 00h

BIT	READ / WRITE	DESCRIPTION
7	R / W	0: GPIO57 1: GPIO57 Æ YLW (Please also set this GPIO to “output” type.)
6	R / W	0: GPIO56 1: GPIO56 Æ GRN (Please also set this GPIO to “output” type.)
5	R / W	0: GPIO55 1: GPIO55 Æ SLPS5_LATCH (Please also set this GPIO to “output” type.)
4	R / W	0: GPIO54 1: GPIO54 Æ WDT (Please also set this GPIO to “output” type.)
3-0	Reserved	

CR F0h. GPIO4 I/O Register
Attribute: Read/Write
Power Well: VSB
Reset by: GP4X_MRST
Default : FFh

BIT	READ / WRITE	DESCRIPTION
7-0	R / W	GPIO4 I/O register 0: The respective GPIO4 PIN is programmed as an output port 1: The respective GPIO4 PIN is programmed as an input port.

CR F1h. GPIO4 Data Register
Attribute: Read/Write
Power Well: VSB
Reset by: GP4X_MRST
Default : 00h

BIT	READ / WRITE	DESCRIPTION
7-0	R / W	GPIO4 Data register For output ports, the respective bits can be read and written by the pins.
	Read Only	For Input ports, the respective bits can only be read by the pins. Write accesses are ignored.

CR F2h. GPIO4 Inversion Register
Attribute: Read/Write
Power Well: VSB
Reset by: GP4X_MRST
Default : 00h

BIT	READ / WRITE	DESCRIPTION

BIT	READ / WRITE	DESCRIPTION
7-0	R / W	GPIO4 Inversion register 0: The respective bit and the port value are the same. 1: The respective bit and the port value are inverted. (Applies to both input and output ports)

CR E8h. GPIO4 Status Register

Attribute: Read Only
Power Well: VSB
Reset by: GP4X_MRST
Default : 00h

BIT	READ / WRITE	DESCRIPTION
7-0	Read Only Read-Clear	GPIO4 Event Status Bit 7-0 corresponds to GP47-GP40, respectively. 0 : No active edge (rising/falling) has been detected 1 : An active edge (rising/falling) has been detected Read the status bit clears it to 0.

CR EEh. GPIO4 Multi-function Select Register

Attribute: Read/Write
Power Well: VSB
Reset by: GP4X_MRST
Default : 00h

BIT	READ / WRITE	DESCRIPTION
7-3	Reserved	
2	R / W	0: GPIO42 1: GPIO42 Æ BEEP (Please also set this GPIO to “output” type.)
1	R / W	0: GPIO41 1: GPIO41 Æ SMI (Please also set this GPIO to “output” type.)
0	Reserved	

CR F4h. GPIO5 I/O Register

Attribute: Read/Write
Power Well: VSB
Reset by: GP5X_MRST
Default : FFh

BIT	READ / WRITE	DESCRIPTION
7-0	R / W	GPIO5 I/O register 0: The respective GPIO5 PIN is programmed as an output port 1: The respective GPIO5 PIN is programmed as an input port.

CR F5h. GPIO5 Data Register

Attribute: Read/Write
Power Well: VSB
Reset by: GP5X_MRST
Default : 00h

BIT	READ / WRITE	DESCRIPTION
7-0	R / W	GPIO5 Data register For output ports, the respective bits can be read and written by the pins.
	Read Only	For input ports, the respective bits can only be read by the pins. Write accesses are ignored.

CR F6h. GPIO5 Inversion Register

Attribute: Read/Write
Power Well: VSB
Reset by: GP5X_MRST
Default : 00h

BIT	READ / WRITE	DESCRIPTION
7-0	R / W	GPIO5 Inversion register 0: The respective bit and the port value are the same. 1: The respective bit and the port value are inverted. (Applies to both input and output ports)

CR F7h. GPIO5 Status Register

Attribute: Read Only
Power Well: VSB
Reset by: GP5X_MRST
Default : 00h

BIT	READ / WRITE	DESCRIPTION
7-0	Read Only Read-Clear	GPIO5 Event Status Bit 7-0 corresponds to GP57-GP50, respectively. 0 : No active edge (rising/falling) has been detected 1 : An active edge (rising/falling) has been detected Read the status bit clears it to 0.

CR FEh. Input Detected Type Register

Attribute: Read/Write
Power Well: VSB
Reset by: GP3X_MRST(Bit7-6), GP4X_MRST(Bit5-4)
Default : 00h

BIT	READ / WRITE	DESCRIPTION
7-4	Reserved	
4	R / W	0: Enable GP41 input de-bouncer 1: Disable GP41 input de-bouncer
3-0	Reserved	

19.9 Logical Device A (ACPI)

CR E0h.

Attribute: Read/Write

Power Well: VRTC

Reset by: Battery reset

Default : 01h

<table>
<tr><th>BIT</th><th>READ / WRITE</th><th>DESCRIPTION</th></tr>
<tr><td>7</td><td>R / W</td><td>DIS_PSIN => Disable the panel switch input to turn on the system power supply.
0: PSIN is wire-AND and connected to PSOUT#.
1: PSIN is blocked and cannot affect PSOUT#.</td></tr>
<tr><td>6</td><td>R / W</td><td>Enable KBC wake-up
0: Disable keyboard wake-up function via PSOUT#.
1: Enable keyboard wake-up function via PSOUT#.</td></tr>
<tr><td>5</td><td>R / W</td><td>Enable Mouse wake-up
0: Disable mouse wake-up function via PSOUT#.
1: Enable mouse wake-up function via PSOUT#.</td></tr>
<tr><td>4</td><td>R / W</td><td>MSRKEY =>
Three keys (ENMDAT_UP, CRE6[7]; MSRKEY, CRE0[4]; MSXKEY, CRE0[1]) define the combinations of the mouse wake-up events. Please see the following table for the details.
<table>
<tr><th>ENMDAT_UP</th><th>MSRKEY</th><th>MSXKEY</th><th>Wake-up event</th></tr>
<tr><td>1</td><td>x</td><td>1</td><td>Any button clicked or any movement.</td></tr>
<tr><td>1</td><td>x</td><td>0</td><td>One click of left or right button.</td></tr>
<tr><td>0</td><td>0</td><td>1</td><td>One click of the left button.</td></tr>
<tr><td>0</td><td>1</td><td>1</td><td>One click of the right button.</td></tr>
<tr><td>0</td><td>0</td><td>0</td><td>Two clicks of the left button.</td></tr>
<tr><td>0</td><td>1</td><td>0</td><td>Two clicks of the right button.</td></tr>
</table></td></tr>
<tr><td>3</td><td>R / W</td><td>Enable CIR wake-up
0: Disable CIR wake-up function via PSOUT#.
1: Enable CIR wake-up function via PSOUT#.</td></tr>
<tr><td>2</td><td>R / W</td><td>Keyboard / Mouse swap enable
0: Normal mode.
1: Keyboard / Mouse ports are swapped.</td></tr>
<tr><td>1</td><td>R / W</td><td>MSXKEY =>
Three keys (ENMDAT_UP, CRE6[7]; MSRKEY, CRE0[4]; MSXKEY, CRE0[1]) define the combinations of the mouse wake-up events. Please check out the table in CRE0[4] for the detailed.</td></tr>
<tr><td>0</td><td>R / W</td><td>KBXKEY =>
0: Only the pre-determined key combination in sequence can wake up the system.
1: Any character received from the keyboard can wake up the system.</td></tr>
</table>

CR E1h. KBC Wake-Up Index Register

Attribute: Read/Write

Power Well: VSB

Reset by: RSMRST#

Default : 00h

BIT	READ / WRITE	DESCRIPTION
7-0	R / W	Keyboard wake-up index register. This is the index register of CRE2, which is the access window for the keyboard's pre-determined key key-combination characters. The first set of wake-up keys is in of 0x00 – 0x0E, the second set 0x30 – 0x3E, and the third set 0x40 – 0x4E. Incoming key combinations can be read through 0x10 – 0x1E.

CR E2h. KBC Wake-Up Data Register

Attribute: Read/Write

Power Well: VSB

Reset by: RSMRST#

Default : 00h

BIT	READ / WRITE	DESCRIPTION
7-0	R / W	Keyboard wake-up data register. This is the data register for the keyboard's pre-determined key-combination characters, which is indexed by CRE1.

CR E3h. Event Status Register

Attribute: Read Only

Power Well: VRTC

Reset by: Battery reset

Default : 00h

BIT	READ / WRITE	DESCRIPTION
7-5	Reserved.	
4	Read Only Read-Clear	This status flag indicates VSB power off/on.
3	Read Only Read-Clear	Thermal shutdown status. 0: No thermal shutdown event issued. 1: Thermal shutdown event issued.
2	Read Only Read-Clear	PSIN_STS 0: No PSIN event issued. 1: PSIN event issued.
1	Read Only Read-Clear	MSWAKEUP_STS => The bit is latched by the mouse wake-up event. 0: No mouse wake-up event issued. 1: Mouse wake-up event issued.
0	Read Only Read-Clear	KBWAKEUP_STS => The bit is latched by the keyboard wake-up event. 0: No keyboard wake-up event issued. 1: Keyboard wake-up event issued.

CR E4h.

Attribute: Read/Write

Power Well: VRTC

Reset by: Battery reset, PWROK(Bit4), LRESET#(Bit3-2)

Default : 00h

BIT	READ / WRITE	DESCRIPTION
7	Reserved	
6-5	R / W	Power-loss control [Note] (These two bits will determine the system turn on or off after AC resume, from G3 to S5 state.) **Bits** **6 5** 0 0: Always turn off. 0 1: Always turn on. (PSON# will active when S3# is high.) 1 0: Pre-state. (System turns On or Off which depends on the state before the power loss. Pease check the definition of the pre-state is "ON" or "OFF" in chapter 26.2.) 1 1: User defined mode for power loss last-state. (The last-state flag is located on "CRE6h, bit4.")
4	R / W	3VSBSW# enable bit 0: Disable. 1: Enable.
3	R / W	Keyboard wake-up options. 0: Password or sequence hot keys programmed in the registers. 1: Any key.
2	R / W	Enable the hunting mode for wake-up events set in CRE0. This bit is cleared when any wake-up event is captured. (Note. This bit is use for KB and MS to generate PSOUT# while VCC valid, for example, wake-up from S1 to S0 via PSOUT#.) 0: Disable.(Default) 1: Enable.
1-0	Reserved.	

Note. Whether "Always turn on", "Pre-state" or "User defined mode", the PSON#'s active condition for system to turn-on is S3# goes high. For south-bridge which S3# default is low while AC resume, please refer "CRE7h, bit4" to achieve the power-loss control application.

CR E5h. GPIOs Reset Source Register

Attribute: Read/Write

Power Well: VSB

Reset by: RSMRST#

Default : 02h

BIT	READ / WRITE	DESCRIPTION
7-6	Reserved.	
5	R / W	GP8X_MRST 0: GP8X reset by RSMRST#. (Default) 1: GP8X reset by SLPS5.

BIT	READ / WRITE	DESCRIPTION
4	R / W	GP7X_MRST 0: GP7X reset by RSMRST#. (Default) 1: GP7X reset by SLPS5.
3-2	Reserved	
1	R / W	Route to PWROK source selection. 0: PSON#. 1: SLP_S3#. (Default)
0	R / W	ATXPGD signal to control PWROK 0: Enable. (Default) 1: Disable.

CR E6h.

Attribute: Read/Write

Power Well: VRTC

Reset by: RSMRST#(Bit7, Bit5, Bit3-1), Battery reset(Bit6, Bit4), PWROK(Bit0)

Default : 1Ch

BIT	READ / WRITE	DESCRIPTION
7	R / W	ENMDAT => Three keys (ENMDAT_UP, CRE6[7]; MSRKEY, CRE0[4]; MSXKEY, CRE0[1]) define the combinations of the mouse wake-up events. Please see the table in CRE0, bit 4 for the details.
6-5	Reserved	
4	R / W	Power-loss Last State Flag. 0: ON 1: OFF. (Default)
3-1	R / W	PWROK_DEL Set the delay time when rising from 3VCC to PWROK **Bits** **3 2 1** 0 0 0: 300 ~ 600mS 0 0 1: 330 ~ 670mS 0 1 0: 390 ~ 730mS 0 1 1: 520 ~ 860mS 1 0 0: 200 ~ 300mS 1 0 1: 230 ~ 370mS 1 1 0: 290 ~ 430mS (Default) 1 1 1: 420 ~ 560mS
0	R / W	PWROK_TRIG => 0: PWROK work normally. (Default) 1: Write 1 will let PWROK keep low or from high to low immediately.

CR E7h.

Attribute: Read/Write

Power Well: VRTC

Reset by: RSMRST#(Bit7-5, Bit3-2), Battery reset(Bit4, Bit1-0)
Default : 00h

BIT	READ / WRITE	DESCRIPTION
7	R / W	ENKD3 => Enable the third set of keyboard wake-up key combination. Its values are accessed through keyboard wake-up index register (CRE1) and keyboard wake-up data register (CRE2) at the index from 40h to 4eh. 0: Disable the third set of the key combinations. 1: Enable the third set of the key combinations.
6	R / W	ENKD2 => Enable the second set of keyboard wake-up key combination. Its values are accessed through keyboard wake-up index register (CRE1) and keyboard wake-up data register (CRE2) at the index from 30h to 3eh. 0: Disable the second set of the key combinations. 1: Enable the second set of the key combinations.
5	R / W	ENWIN98KEY => Enable Win98 keyboard dedicated key to wake-up system via PSOUT# when keyboard wake-up function is enabled. 0: Disable Win98 keyboard wake-up. 1: Enable Win98 keyboard wake-up.
4	R / W	EN_ONPSOUT **(VBAT)** Disable/Enable to issue a 0.5s delay PSOUT# level when system returns from power loss state and is supposed to be on as described in CRE4[6:5], logic device A. (For southbridge which S3# default is low when AC resume, like VIA, AMD…etc.) 0: Disable. (Default) 1: Enable.
3	R / W	Select WDT1 reset source 0: Watchdog timer is reset by LRESET#. 1: Watchdog timer is reset by PWROK.
2-1	Reserved.	
0	R / W	Hardware Monitor RESET source select 0: PWROK. (Default) 1: LRESET#.

CR E9h. GPIOs Reset Source Register

Attribute: Read/Write
Power Well: VSB
Reset by: RSMRST#
Default : 00h

BIT	READ / WRITE	DESCRIPTION
7-6	Reserved.	
5	R / W	GP5X_MRST 0: GP5X reset by RSMRST#. 1: GP5X reset by SLPS5.

BIT	READ / WRITE	DESCRIPTION
4	R / W	GP4X_MRST 0: GP4X reset by RSMRST#. 1: GP4X reset by SLPS5.
3	Reserved	
2	R / W	GP2X_MRST 0: GP2X reset by RSMRST#. 1: GP2X reset by SLPS5.
1-0	Reserved	

CR F0h.
Attribute: Read/Write
Power Well: VRTC
Reset by: Battery reset
Default : 00h

BIT	READ / WRITE	DESCRIPTION
7-5	R / W	**Pin33** function selection LDA CRF0 [Bit7-5] / Pin33 000 / DEEP_S5_0 001 / 3VSBSW 010 / LATCH_BKFD_CUT 011 / ATXPGDO 1xx / PWROK
4-0	Reserved.	

CR F2h.
Attribute: Read/Write
Power Well: VSB
Reset by: RSMRST#
Default : 5Ch

BIT	READ / WRITE	DESCRIPTION
7-6	Reserved	
5	R / W	Block SLP_S3# to PSON# 0: Disable 1: Enable
4	Reserved	
3	R / W	Enable RSTOUT1# function. 0: Disable RSTOUT1#. 1: Enable RSTOUT1#. (Default)

BIT	READ / WRITE	DESCRIPTION
2	R / W	Enable RSTOUT0# function. 0: Disable RSTOUT0#. 1: Enable RSTOUT0#. (Default)
1	Reserved.	
0	R / W	EN_PME 0 : Disable PME. (Default) 1 : Enable PME.

CR F3h.
Attribute: Read/Write
Power Well: VSB
Reset by: RSMRST#
Default : 00h

BIT	READ / WRITE	DESCRIPTION
7-6	Reserved	
5	R / W-Clear	PME status of the Mouse event. Write 1 to clear this status.
4	R / W-Clear	PME status of the KBC event. Write 1 to clear this status.
3-2	Reserved	
1	R / W-Clear	PME status of the URA IRQ event. Write 1 to clear this status.
0	Reserved	

CR F4h.
Attribute: Read/Write
Power Well: VSB
Reset by: RSMRST#
Default : 00h

BIT	READ / WRITE	DESCRIPTION
7-4	Reserved	
3	R / W-Clear	PME status of the HM IRQ event. Write 1 to clear this status.
2	R / W-Clear	PME status of the WDT1 event. Write 1 to clear this status.
1	R / W-Clear	PME status of the RIA event. Write 1 to clear this status.
0	Reserved	

CR F6h.
Attribute: Read/Write

Power Well: VSB
Reset by: LRESET#(Bit7), RSMRST#
Default : 00h

BIT	READ / WRITE	DESCRIPTION
7	R / W	0: Disable KB, MS interrupt of the KBC password event. 1: Enable KB, MS interrupt of the KBC password event.
6	Reserved	
5	R / W	0: Disable PME interrupt of the Mouse event. 1: Enable PME interrupt of the Mouse event.
4	R / W	0: Disable PME interrupt of the KBC event. 1: Enable PME interrupt of the KBC event.
3-2	Reserved	
1	R / W	0: Disable PME interrupt of the URA IRQ event. 1: Enable PME interrupt of the URA IRQ event.
0	Reserved	

CR F7h.
Attribute: Read/Write
Power Well: VSB
Reset by: RSMRST#
Default : C0h

BIT	READ / WRITE	DESCRIPTION
7	Reserved	
6	R / W	RSTOUT1# Push-Pull/OD select 0: Open Drain 1: Push-Pull (Default)
5	Reserved	
4	R / W	0: Disable PME interrupt of the CIRWAKEUP IRQ event. 1: Enable PME interrupt of the CIRWAKEUP IRQ event.
3	R / W	0: Disable PME interrupt of the HM IRQ event. 1: Enable PME interrupt of the HM IRQ event.
2	R / W	0: Disable PME interrupt of the WDT1 event. 1: Enable PME interrupt of the WDT1 event.
1	R / W	0: Disable PME interrupt of the RIA event. 1: Enable PME interrupt of the RIA event.
0	Reserved	

CR FEh. GPIO41 Event Route Selection Register
Attribute: Read/Write
Power Well: VRTC
Reset by: Battery reset
Default : 00h

BIT	READ / WRITE	DESCRIPTION
7	R / W	0: Disable GP41 event route to PSOUT#. 1: Enable GP41 event route to PSOUT#.
6-4	Reserved	
3	R / W	0: Disable GP41 event route to PME#. 1: Enable GP41 event route to PME#.
2-0	Reserved	

19.10 Logical Device B (Hardware Monitor, Front Panel LED)

CR 30h.

Attribute: Read/Write
Power Well: VCC
Reset by: LRESET#
Default : 00h

BIT	READ / WRITE	DESCRIPTION
7-1	Reserved.	
0	R / W	0: Hardware Monitor & SB-TSI device is inactive. 1: Hardware Monitor & SB-TSI device is active.

CR 60h, 61h.

Attribute: Read/Write
Power Well: VCC
Reset by: LRESET#
Default : 00h, 00h

BIT	READ / WRITE	DESCRIPTION
7-0	R / W	These two registers select the HM base address <100h : FFEh> along a two-byte boundary.

CR 62h, 63h.

Attribute: Read/Write
Power Well: VCC
Reset by: LRESET#
Default : 00h, 00h

BIT	READ / WRITE	DESCRIPTION
7-0	R / W	These two registers select the SB-TSI base address <100h : FFEh> along a two-byte boundary.

CR 70h.

Attribute: Read/Write
Power Well: VCC
Reset by: LRESET#
Default : 00h

BIT	READ / WRITE	DESCRIPTION
7-4	Reserved.	
3-0	R / W	These bits select the IRQ resource for HM.

CR E0h. SYSFAN Duty Cycle Register

Attribute: Read/Write
Power Well: VSB
Reset by: RSMRST#

Default : 7Fh

BIT	READ / WRITE	DESCRIPTION
7-0	R / W	SYSFAN Duty Cycle Register

CR E1h. CPUFAN Duty Cycle Register

Attribute: Read/Write
Power Well: VSB
Reset by: RSMRST#
Default : 7Fh

BIT	READ / WRITE	DESCRIPTION
7-0	R / W	CPUFAN Duty Cycle Register

CR F0h. FANIN De-bouncer Register

Attribute: Read/Write
Power Well: VSB
Reset by: LRESET#
Default : 00h

BIT	READ / WRITE	DESCRIPTION
7-3	Reserved.	
2	R / W	1: Enable CPUFANIN input de-bouncer. 0: Disable CPUFANIN input de-bouncer.
1	R / W	1: Enable SYSFANIN input de-bouncer. 0: Disable SYSFANIN input de-bouncer.
0	Reserved.	

CR F1h. SMI IRQ Register

Attribute: Read/Write
Power Well: VCC
Reset by: LRESET#
Default : 00h

BIT	READ / WRITE	DESCRIPTION
7	R / W	SMI IRQ Enable
6-0	Reserved.	

CR F2h. Deep S3 Sleeping State Front panel Green & Yellow LED control register

Attribute: Read/Write
Power Well: VRTC
Reset by: Battery reset
Default : 00h

BIT	READ / WRITE	DESCRIPTION

BIT	READ / WRITE	DESCRIPTION
7-4	R / W	**Deep S3**_YLW_BLK_FREQ bits (This function affects by LDB CRF9 Bit 7) 0000: High-Z. (The output type of YLW_LED is open-drain.) (Default) 0001: YLW_LED outputs 0.0625Hz. 0010: YLW_LED outputs 0.125Hz. 0011: YLW_LED outputs 0.25Hz. 0100: YLW_LED outputs 0.5Hz 0101: YLW_LED outputs 1Hz. 0110: YLW_LED outputs 2Hz. 0111: YLW_LED outputs low. 1XXX: Fading LED.
3-0	R / W	**Deep S3**_GRN_BLK_FREQ bits (This function affects by LDB CRF9 Bit 6) 0000: High-Z. (The output type of YLW_LED is open-drain.) (Default) 0001: GRN_LED outputs 0.0625Hz. 0010: GRN_LED outputs 0.125Hz. 0011: GRN_LED outputs 0.25Hz. 0100: GRN_LED outputs 0.5Hz 0101: GRN_LED outputs 1Hz. 0110: GRN_LED outputs 2Hz. 0111: GRN_LED outputs low. 1XXX: Fading LED.

CR F5h. SMBus de-bouncer Register

Attribute: Read/Write

Power Well: VSB

Reset by: RSMRST#, PWROK(Bit7-5)

Default : 00h

BIT	READ / WRITE	DESCRIPTION
7-5	R / W	MLED Frequency 000: always high 001: always low 010: 4 Hz 011: 2 Hz 100: 1 Hz 101: 1/2 Hz 110: 1/4 Hz 111: 1/8 Hz
4-3	Reserved.	
1	R / W	1: Enable SCL input de-bouncer 160ns. 0: Disable SCL input de-bouncer.
0	R / W	1: Enable SDA input de-bouncer 160ns. 0: Disable SDA input de-bouncer.

CR F6h. Deep S5 Front Panel Green & Yellow LED control register

Attribute: Read/Write
Power Well: VRTC
Reset by: Battery reset
Default : 00h

BIT	READ / WRITE	DESCRIPTION
7-4	R / W	**Deep S5**_YLW_BLK_FREQ bits (This function affects by LDB CRF9 Bit 5) 0000: High-Z. (The output type of YLW_LED is open-drain.) (Default) 0001: YLW_LED outputs 0.0625Hz. 0010: YLW_LED outputs 0.125Hz. 0011: YLW_LED outputs 0.25Hz. 0100: YLW_LED outputs 0.5Hz 0101: YLW_LED outputs 1Hz. 0110: YLW_LED outputs 2Hz. 0111: YLW_LED outputs low. 1XXX: Fading LED.
3-0	R / W	**Deep S5**_GRN_BLK_FREQ bits (This function affects by LDB CRF9 Bit 4) 0000: High-Z. (The output type of YLW_LED is open-drain.) (Default) 0001: GRN_LED outputs 0.0625Hz. 0010: GRN_LED outputs 0.125Hz. 0011: GRN_LED outputs 0.25Hz. 0100: GRN_LED outputs 0.5Hz 0101: GRN_LED outputs 1Hz. 0110: GRN_LED outputs 2Hz. 0111: GRN_LED outputs low. 1XXX: Fading LED.

CR F7h. Front Panel Green LED (GRN_LED) control register
Attribute: Read/Write
Power Well: VRTC
Reset by: Battery reset
Default : 87h

BIT	READ / WRITE	DESCRIPTION
7	R / W	**AUTO_EN** (Powered by VSB, RSMRST# reset , default = 1) 0: GRN_LED and YLW_LED are controlled by GRN_ LED_ RST, GRN_BLK_FREQ and YLW_LED_RST, YLW_BLK_FREQ bits. 1: GRN_LED and YLW_LED are controlled by “SLP_S5#” and “SLP_S3#”.
6	R / W	**GRN_LED_RST#** (Default= 0) 0: GRN_BLK_FREQ will be set to “0000” (High-Z) when into S3~S5 state. 1: GRN_BLK_FREQ will be kept when into S3~S5 state.
5	R / W	GRN_LED_POL 0: GRN_LED output is active low. (Default) 1: GRN_LED output is active high.
4	Reserved.	

BIT	READ / WRITE	DESCRIPTION
3-0	R / W	**GRN_BLK_FREQ** bits (The reset depends on bit6, GRN_LED_RST#) 0000: High-Z. (The output type of YLW_LED is open-drain.) 0001: GRN_LED outputs 0.0625Hz. 0010: GRN_LED outputs 0.125Hz. 0011: GRN_LED outputs 0.25Hz. 0100: GRN_LED outputs 0.5Hz 0101: GRN_LED outputs 1Hz. 0110: GRN_LED outputs 2Hz. 0111: GRN_LED outputs low. (Default) 1XXX: Fading LED.

CR F8h. Front Panel Yellow LED (YLW_LED) control register

Attribute: Read/Write

Power Well: VRTC

Reset by: Battery reset

Default : 47h

BIT	READ / WRITE	DESCRIPTION
7	Reserved.	
6	R / W	**YLW_LED_RST#** (Default =1) 0: YLW_BLK_FREQ will be set to “0000” (High-Z) when into S3~S5 state. 1: YLW_BLK_FREQ will be kept when into S3~S5 state.
5	R / W	YLW_LED_POL 0: YLW_LED output is active low. (Default) 1: YLW_LED output is active high.
4	Reserved.	
3-0	R / W	**YLW_BLK_FREQ** bits (The reset depends on bit6,YLW_LED_RST#) 0000: High-Z. (The output type of YLW_LED is open-drain.) 0001: YLW_LED outputs 0.0625Hz. 0010: YLW_LED outputs 0.125Hz. 0011: YLW_LED outputs 0.25Hz. 0100: YLW_LED outputs 0.5Hz 0101: YLW_LED outputs 1Hz. 0110: YLW_LED outputs 2Hz. 0111: YLW_LED outputs low. (Default) 1XXX: Fading LED.

CR F9h. Deep Sleep LED Eanble register

Attribute: Read/Write

Power Well: VRTC

Reset by: Battery reset

Default : 00h

BIT	READ / WRITE	DESCRIPTION

BIT	READ / WRITE	DESCRIPTION
7	R / W	Deep S3_YLW_BLK_FREQ : 0: Depend on setting of CRF2h, bit7~4. 1: Always output high.
6	R / W	Deep S3_GRN_BLK_FREQ : 0: Depend on setting of CRF2h, bit3~0. 1: Always output high.
5	R / W	Deep S5_YLW_BLK_FREQ : 0: Depend on setting of CRF6h, bit7~4. 1: Always output high.
4	R / W	Deep S5_GRN_BLK_FREQ : 0: Depend on setting of CRF2h, bit3~0. 1: Always output high.
3-0	Reserved.	

19.11 Logical Device D (WDT1)

CR F0h. Register

Attribute: Read/Write

Power Well: VSB

Reset by: RSMRST#

Default : 00h

BIT	READ / WRITE	DESCRIPTION
7	RO	Mask WDT1 to affect PWROK 0: Mask disable. (WDT1 default affect PWROK) 1: Mask enable. (WDT1 not affect PWROK)
6-0	Reserved.	

19.12 Logical Device E (CIR WAKE-UP)

CR 30h.

Attribute: Read/Write
Power Well: VCC
Reset by: LRESET#
Default : 00h

BIT	READ / WRITE	DESCRIPTION
7-1	Reserved.	
0	R / W	0: CIR Wake-up is inactive. 1: CIR Wake-up Interface is active.

CR 60h, 61h.

Attribute: Read/Write
Power Well: VCC
Reset by: LRESET#
Default : 00h, 00h

BIT	READ / WRITE	DESCRIPTION
7-0	R / W	These two registers select CIR Wake-up Interface I/O base address <100h: FF8h> on 1 byte boundary.

CR 70h.

Attribute: Read/Write
Power Well: VCC
Reset by: LRESET#
Default : 00h

BIT	READ / WRITE	DESCRIPTION
7-4	Reserved.	
3-0	R / W	These bits select IRQ resource for CIR Wake-up.

19.13 Logical Device F (GPIO Push-pull or Open-drain selection)

CR E1h.
Attribute: Read/Write
Power Well: VSB
Reset by: GP2X_MRST
Default : FFh

BIT	READ / WRITE	DESCRIPTION
7-0	R / W	GP2 Push-Pull/OD select 0:Push-Pull 1:Open Drain

CR E3h.
Attribute: Read/Write
Power Well: VSB
Reset by: GP4X_MRST
Default : FFh

BIT	READ / WRITE	DESCRIPTION
7-0	R / W	GP4 Push-Pull/OD select 0:Push-Pull 1:Open Drain

CR E4h.
Attribute: Read/Write
Power Well: VSB
Reset by: GP5X_MRST
Default : FFh

BIT	READ / WRITE	DESCRIPTION
7-0	R / W	GP5 Push-Pull/OD select 0:Push-Pull 1:Open Drain

CR E6h.
Attribute: Read/Write
Power Well: VSB
Reset by: GP7X_MRST
Default : 0Fh

BIT	READ / WRITE	DESCRIPTION
7-4	Reserved	
3-0	R / W	GP7 Push-Pull/OD select 0:Push-Pull 1:Open Drain

CR E7h.
Location: Address E7h
Attribute: Read/Write
Power Well: VSB
Reset by: RSMRST#
Default : FFh
Size: 8 bits

BIT	READ / WRITE	DESCRIPTION
7-0	R / W	GP8 Push-Pull/OD select 0:Push-Pull 1:Open Drain

CR F0h. I2C Control & Address Register
Attribute: Read/Write
Power Well: VSB
Reset by: RSMRST#
Default : 9Dh

BIT	READ / WRITE	DESCRIPTION
7	R / W	Enable I2C_Slave
6-0	R / W	I2C Address

CR F1h. I2C to 80PORT Control Register
Attribute: Read/Write
Power Well: VSB
Reset by: LRESET#
Default : 00h

BIT	READ / WRITE	DESCRIPTION
7-2	Reserved.	
1	R / W	80PORT Display 0: Enable 1: Disable
0	R / W	LPC or I2C to 80PORT switch

CR F2h. I2C to 80PORT Data Register
Attribute: Read/Write
Power Well: VSB
Reset by: RSMRST#
Default : 00h

BIT	READ / WRITE	DESCRIPTION
7-0	R / W	I2C to 80PORT Data

19.14 Logical Device 16 (Deep Sleep)

CR 30h. Deep Sleep configuration register

Attribute: Read/Write
Power Well: VRTC
Reset by: Battery reset
Default : 20h

BIT	READ / WRITE	DESCRIPTION
7	R / W	DIS_SLPSUS_PULLUP (test mode) 0: Enable pin 44 (SLP_SUS#) internal pull-up. 1: Disable pin 44 (SLP_SUS#) internal pull-up.
6	R / W	RSMRST# Detect Source Select for Deep Sleep Mode. 0: RSMRST# detected source from PSOUT# voltage (Pin28). 1: Reserved **Note**. Set to 0, if Deep S5 is enabled. Set to 1, if DSW is enabled.
5	Reserved	
4	R / W	dsw_wake_opt (test mode) 0: The PSOUT# will assert until SLPS3# high when deep s5 wakeup event happened. 1: The PSOUT# will assert until RSMRST_L high and SLP_SUS_L high when deep s5 wakeup event happened. **PS. This bit only active when PCH_DSW_EN & (Deep S5 Enable | Deep S3 Enable)**
3	R / W	PCH DSW Enable 0: If PCH disable DSW function. 1: if PCH enable DSW function. (SLP_SUS# affects RSMRST#)
2	R / W	Reserved
1	R / W	Deep S3 Enable 0: If SLP_S3# state will not enter Deep S3 state. 1: If SLP_S3# state will enter Deep S3 state.
0	R / W	Deep S5 Enable 0: Disable Deep S5 function when into S5 state (SLP_S5#). 1: Enable Deep S5 function when into S5 state (SLP_S5#).

CR E0h. Deep Sleep wake up PSOUT# delay time

Attribute: Read/Write
Power Well: VSB
Reset by: RSMRST#
Default : **20h** (Default: 512ms)

BIT	READ / WRITE	DESCRIPTION
7-6	Reserved.	

BIT	READ / WRITE	DESCRIPTION
5-0	R / W	Deep Sleep wake up PSOUT# delay time. When system wake up from deep sleep state, IO will issue a low pulse via PSOUT# after SYS_3VSB and wait a delay time. DELAY TIME = (Setting Value) * 16ms Example : maximum delay time = $(3F)_{hex}$ * 16ms = 1008ms

CR E1h. Deep Sleep wake up PSOUT# pulse width

Attribute: Read/Write

Power Well: VSB

Reset by: RSMRST#

Default : **04h** (Default: 128 ms)

BIT	READ / WRITE	DESCRIPTION
7-4	Reserved.	
3-0	R / W	Deep Sleep wake up PSOUT# pulse width. When system wake up from deep sleep state, IO will issue a low pulse via PSOUT#.. Pulse Width = (Setting Value) * **32ms** Example : maximum pulse width = $(F)_{hex}$ * **32ms** = 480ms

CR E2h. Deep Sleep Delay Time Control

Attribute: Read/Write

Power Well: VRTC

Reset by: Battery reset

Default : 05h

BIT	READ / WRITE	DESCRIPTION
7	R / W	0: The unit of deep sleep delay time is second. 1: The unit of deep sleep delay time is Minute.
6-0	R / W	Deep Sleep Delay Time Control. When system leaves S0 State, IO will wait a delay time before entering into Deep Sleep State. Example: maximum delay time = 127 second/minute

20. SPECIFICATIONS

20.1 Absolute Maximum Ratings

SYMBOL	PARAMETER	RATING	UNIT
3VCC	Power Supply Voltage (3.3V)	-0.3 to 3.6	V
VI	Input Voltage	-0.3 to 3VCC+0.3	V
	Input Voltage (5V tolerance)	-0.3 to 5.5	V
TA	Operating Temperature	0 to +70	°C
TSTG	Storage Temperature	-55 to +150	°C

Note: Exposure to conditions beyond those listed under Absolute Maximum Ratings may adversely affect the life and reliability of the device.

20.2 DC CHARACTERISTICS

(T_A = 0°C to +70°C, V_{DD} = 3.3V ± 5%, V_{SS} = 0V)

PARAMETER	SYM	MIN	TYP	MAX.	UNIT	CONDITIONS
Battery Quiescent Current	IBAT			2.4	µA	VBAT = 2.5 V
ACPI Stand-by Power Supply Quiescent Current	IVSB			8.0	mA	VSB = 3.3 V, All ACPI pins are not connected.
VCC Quiescent Current	IVCC			25	mA	VSB = 3.3 V VCC (AVCC)= 3.3 V LRESET = High IOCLK = 48MHz CASEOPEN Pull-Up to VBAT
Vtt Quiescent Current	IVTT			1	mA	VSB = 3.3 V VCC (AVCC)= 3.3 V VTT = 1.2V LRESET = High IOCLK = 48MHz CASEOPEN Pull-Up to VBAT
AIN – Analog input						
AOUT – Analog output						
IN_{tp3} – 3.3V TTL-level input pin						

PARAMETER	SYM	MIN	TYP	MAX.	UNIT	CONDITIONS
Input Low Voltage	V_{IL}			0.8	V	
Input High Voltage	V_{IH}	2.0			V	
Input High Leakage	I_{LIH}			+10	μA	V_{IN} = 3.3V
Input Low Leakage	I_{LIL}			-10	μA	V_{IN} = 0 V
IN_{tsp3} – 3.3V TTL-level, Schmitt-trigger input pin						
Input Low Threshold Voltage	V_{t-}	0.5	0.8	1.1	V	V_{CC} = 3.3 V
Input High Threshold Voltage	V_{t+}	1.6	2.0	2.4	V	V_{CC} = 3.3 V
Hystersis	V_{TH}	0.5	1.2		V	V_{CC} = 3.3 V
Input High Leakage	I_{LIH}			+10	μA	V_{IN} = 3.3 V
Input Low Leakage	I_{LIL}			-10	μA	V_{IN} = 0 V
IN_{gp5} – 5V GTL-level input pin						
Input Low Voltage	V_{IL}		0.72		V	
Input High Voltage	V_{IH}		0.72		V	
Input High Leakage	I_{LIH}			+10	μA	V_{IN} = 3.3V
Input Low Leakage	I_{LIL}			-10	μA	V_{IN} = 0 V
IN_{tp5} – 5V TTL-level input pin						
Input Low Voltage	V_{IL}			0.8	V	
Input High Voltage	V_{IH}	2.0			V	
Input High Leakage	I_{LIH}			+10	μA	V_{IN} = 3.3V
Input Low Leakage	I_{LIL}			-10	μA	V_{IN} = 0 V
IN_{tscup5} – 5V TTL-level, Schmitt-trigger input buffer with controllable pull-up						
Input Low Threshold Voltage	V_{t-}	0.5	0.8	1.1	V	V_{CC} = 3.3 V
Input High Threshold Voltage	V_{t+}	1.6	2.0	2.4	V	V_{CC} = 3.3 V
Hystersis	V_{TH}	0.5	1.2		V	V_{CC} = 3.3 V
Input High Leakage	I_{LIH}			+10	μA	V_{IN} = 3.3 V
Input Low Leakage	I_{LIL}			-10	μA	V_{IN} = 0 V
IN_{tsp5} – 5V TTL-level, Schmitt-trigger input pin						
Input Low Threshold Voltage	V_{t-}	0.5	0.8	1.1	V	V_{CC} = 3.3 V
Input High Threshold Voltage	V_{t+}	1.6	2.0	2.4	V	V_{CC} = 3.3 V
Hystersis	V_{TH}	0.5	1.2		V	V_{CC} = 3.3 V
Input High Leakage	I_{LIH}			+10	μA	V_{IN} = 3.3 V
Input Low Leakage	I_{LIL}			-10	μA	V_{IN} = 0 V
IN_{tdp5} – 5V TTL-level input pin with internal pull-down resistor						
Input Low Voltage	V_{IL}			0.8	V	
Input High Voltage	V_{IH}	2.0			V	

PARAMETER	SYM	MIN	TYP	MAX.	UNIT	CONDITIONS
Input High Leakage	I_{LIH}			+10	μA	V_{IN} = 3.3V
Input Low Leakage	I_{LIL}			-10	μA	V_{IN} = 0 V
O8 – Output pin with 8mA source-sink capability						
Output Low Voltage	V_{OL}			0.4	V	I_{OL} = 8 mA
Output High Voltage	V_{OH}	2.4			V	I_{OH} = -8 mA
OD8 – Open-drain output pin with 8mA sink capability						
Output Low Voltage	V_{OL}			0.4	V	I_{OL} = 8 mA
O12 – Output pin with 12mA source-sink capability						
Output Low Voltage	V_{OL}			0.4	V	I_{OL} = 12 mA
Output High Voltage	V_{OH}	2.4			V	I_{OH} = -12 mA
OD12 – Open-drain output pin with 12mA sink capability						
Output Low Voltage	V_{OL}			0.4	V	I_{OL} = 12 mA
O24 – Output pin with 24mA source-sink capability						
Output Low Voltage	V_{OL}			0.4	V	I_{OL} = 24 mA
Output High Voltage	V_{OH}	2.4			V	I_{OH} = -24 mA
OD24 – Open-drain output pin with 24mA sink capability						
Output Low Voltage	V_{OL}			0.4	V	I_{OL} = 24 mA
O48 – Output pin with 48mA source-sink capability						
Output Low Voltage	V_{OL}			0.4	V	I_{OL} = 48 mA
Output High Voltage	V_{OH}	2.4			V	I_{OH} = -48 mA
OD48 – Open-drain output pin with 48mA sink capability						
Output Low Voltage	V_{OL}			0.4	V	I_{OL} = 48 mA
I/O_{V3} – Bi-direction pin with source capability of 6 mA and sink capability of 1 mA for INTEL® PECI						
Input Low Voltage	V_{IL}	$0.275*V_{tt}$		$0.5*V_{tt}$	V	
Input High Voltage	V_{IH}	$0.55*V_{tt}$		$0.725*V_{tt}$	V	
Output Low Voltage	V_{OL}			$0.25*V_{tt}$	V	
Output High Voltage	V_{OH}	$0.75*V_{tt}$			V	
Hysterisis	V_{Hys}	$0.1*V_{tt}$			V	
O12cu – Output pin 12mA source-sink capability with controllable pull-up						
Output Low Voltage	V_{OL}			0.4	V	I_{OL} = 12 mA
Output High Voltage	V_{OH}	2.4			V	I_{OH} = -12 mA
OD12cu – Open-drain 12mA sink capability output pin with controllable pull-up						
Output Low Voltage	V_{OL}			0.4	V	I_{OL} = 12 mA

21. AC CHARACTERISTICS

21.1 Power On / Off Timing

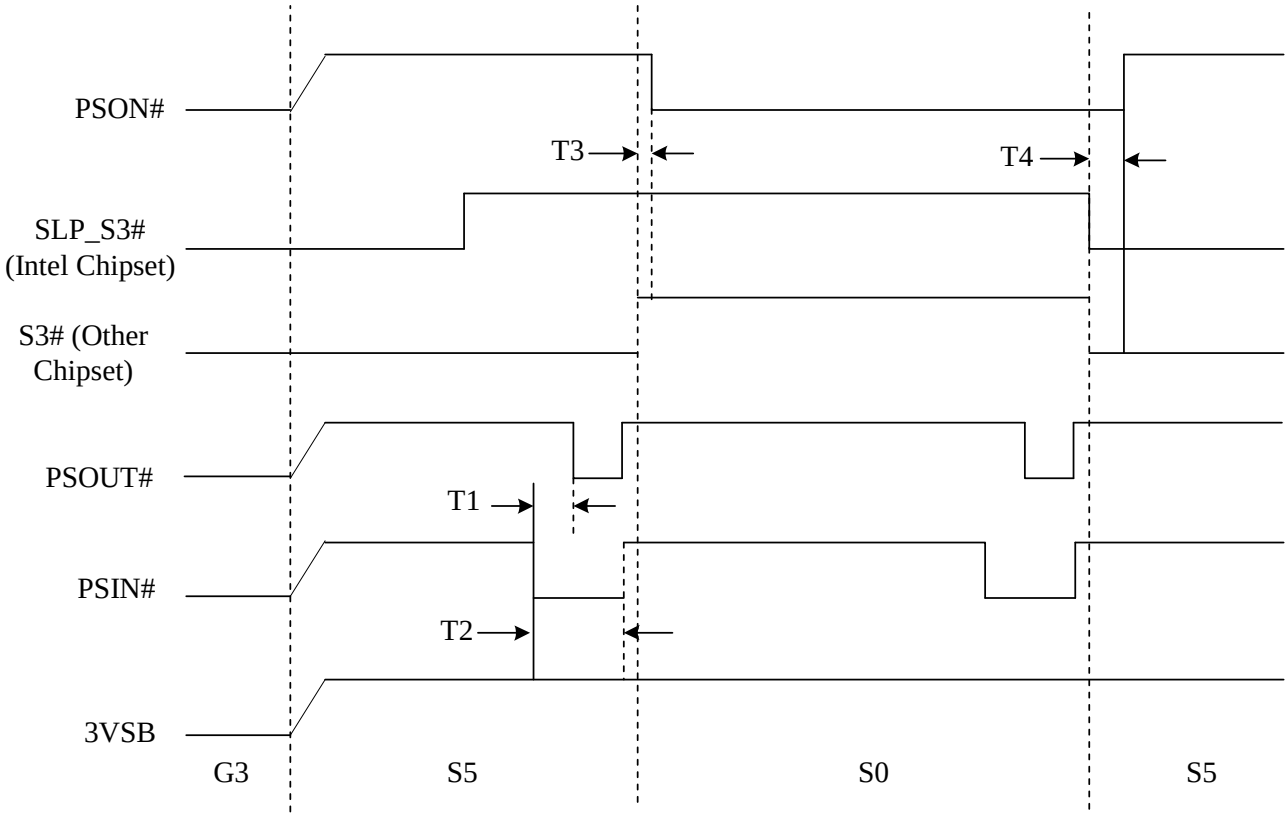

	T1	T2	T3	T4
IDEAL TIMING	64ms	Over 64ms at least	< 10ns	32ms

21.2 AC Power Failure Resume Timing

(1) Logical Device A, CR [E4h] bits [6:5] =00 means “OFF” state

(“OFF” means the system is always turned off after the AC power loss recovered.)

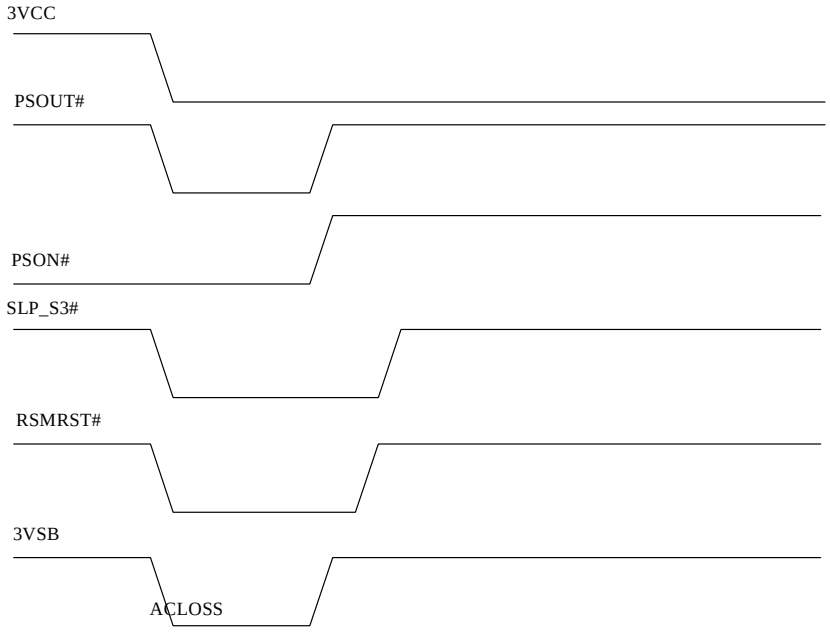

(2) Logical Device A, CR [E4h] bits [6:5]=01 means “ON” state.
(“ON” means the system is always turned on after AC power loss recovered.)

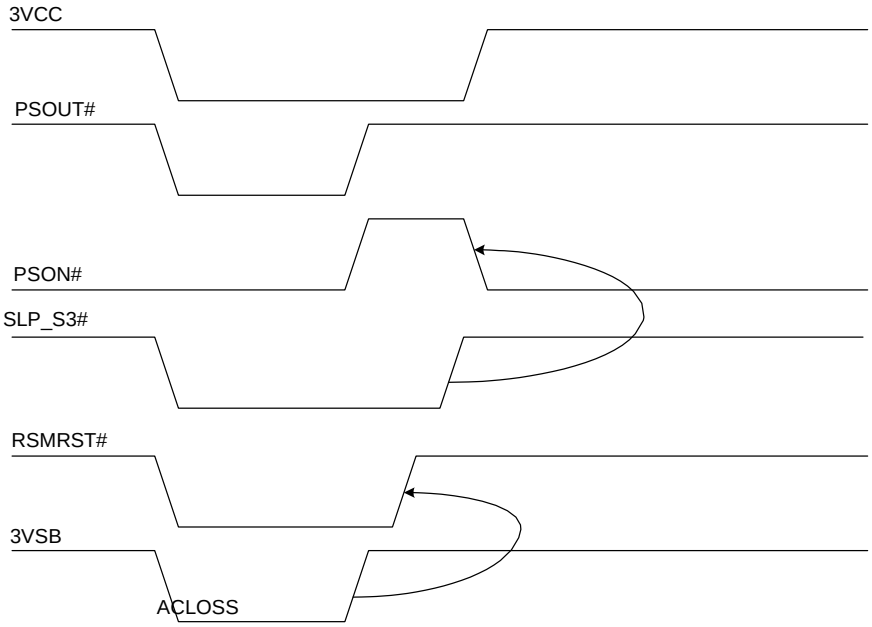

**** What's the definition of former state at AC power failure?**

1) The previous state is "ON"

VCC falls to 2.6V and SLP_S3# keeps at VIH 2.0V

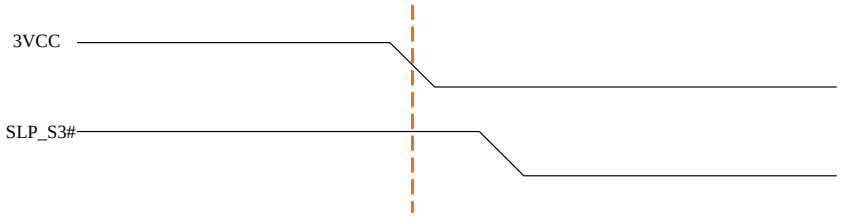

2) The previous state is "OFF"

VCC fall to 2.6V and SLP_S3# keeps at VIL 0.8V

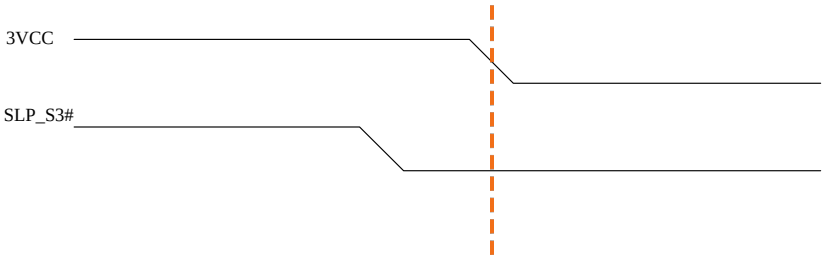

To ensure that VCC does not fall faster than VSB in various ATX Power Supplies, the NCT5532D adds the option of "user define mode" for the pre-defined state before AC power failure. BIOS can set the pre-defined state for the system to be "On" or "Off". According to this setting, the system chooses the state after the AC power recovery.

Please refer to the descriptions of bit 6~5 of CR E4h and bit 4 of CR E6h in Logical Device A.

CR E4h

BIT	READ/WRITE	DESCRIPTION
6~5	R / W	Power-loss control bits => (VBAT) 0 0: System always turns off when it returns from power-loss state. 0 1: System always turns on when it returns from power-loss state. 1 0: System turns off / on when it returns from power-loss state depending on the state before the power loss. 1 1: User defines the resuming state before power loss.(refer to Logic Device A, CRE6[4])

CR E6h

BIT	READ/WRITE	DESCRIPTION
4	R / W	Power loss Last State Flag. **(VBAT)** 0: ON 1: OFF

21.3 Clock Input Timing

PARAMETER	48MHZ / 24MHZ		UNIT
	MIN	MAX	
Cycle to cycle jitter		300/500	ps
Duty cycle	45	55	%

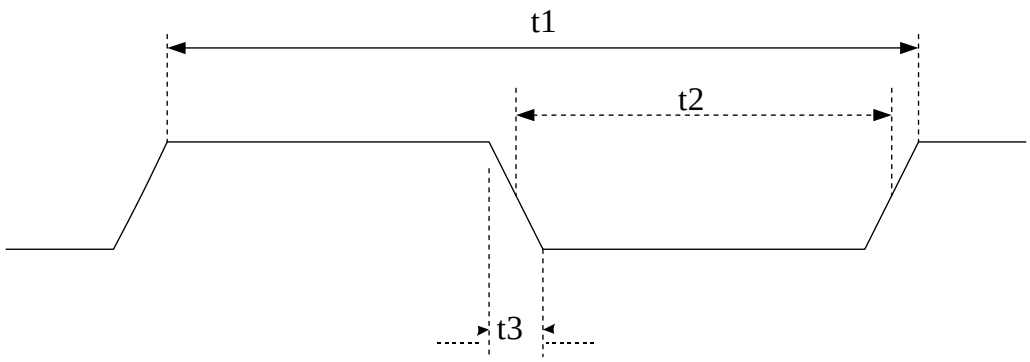

PARAMETER	DESCRIPTION	48MHZ / 24MHZ			UNIT
		MIN	TYP	MAX	
t1	Clock cycle time		20.8 / 41.7		ns
t2	Clock high time/low time	9 / 19	10 / 21		ns
t3	Clock rising time/falling time (0.4V~2.4V)			3	ns

21.4 PECI Timing

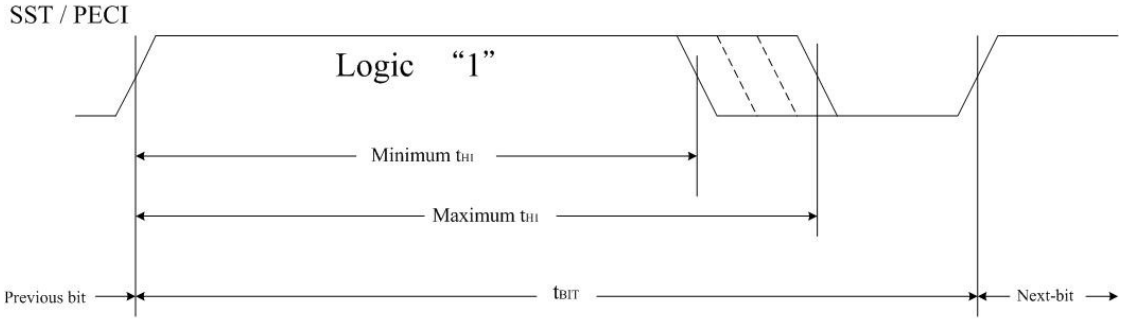

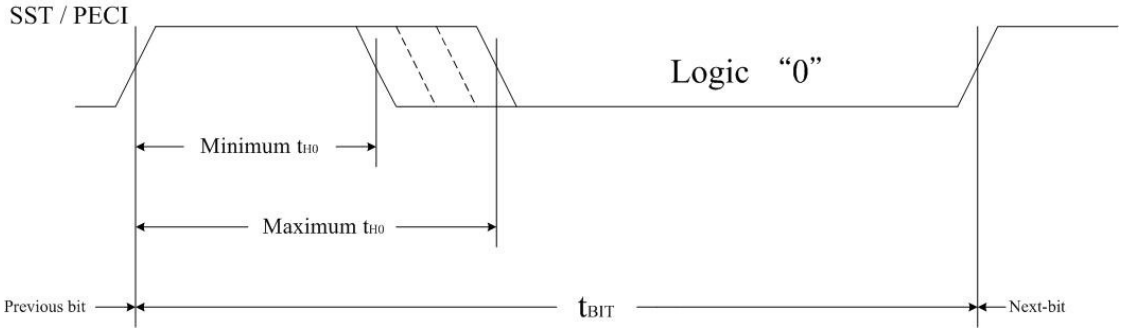

SYMBOL		MIN	TYP	MAX	UNITS
t_{BIT}	Client	0.495		500	μs
	Originator	0.495		250	
t_{H1}		0.6	3/4	0.8	× t_{BIT}
t_{H0}		0.2	1/4	0.4	× t_{BIT}

21.5 SMBus Timing

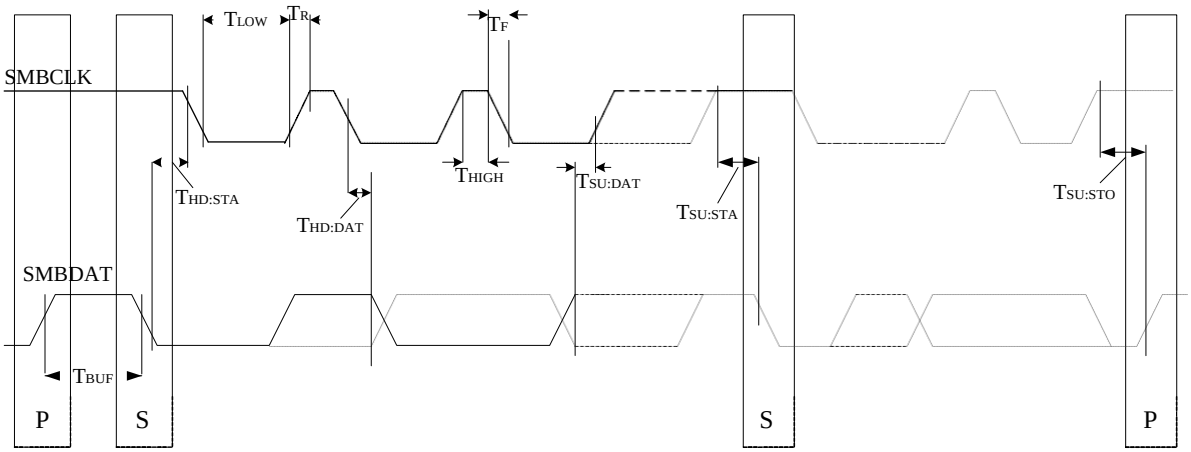

21.6 UART

PARAMETER	SYMBOL	TEST CONDITIONS	MIN.	MAX.	UNIT
Delay from Stop to Set Interrupt	TSINT		9/16		Baud Rate
Delay from $\overline{IOR}$ Reset Interrupt	TRINT		9	1000	nS
Delay from Initial IRQ Reset to Transmit Start	TIRS		1/16	8/16	Baud Rate
Delay from to Reset interrupt	THR			175	nS
Delay from Initial $\overline{IOW}$ to interrupt	TSI		9/16	16/16	Baud Rate
Delay from Stop to Set Interrupt	TSTI			8/16	Baud Rate
Delay from $\overline{IOR}$ to Reset Interrupt	TIR		8	250	nS
Delay from $\overline{IOR}$ to Output	TMWO		6	200	nS
Set Interrupt Delay from Modem Input	TSIM		18	250	nS
Reset Interrupt Delay from $\overline{IOR}$	TRIM		9	250	nS
Baud Divisor	N	100 pF Loading		2^{16}-1	

UART Receiver Timing

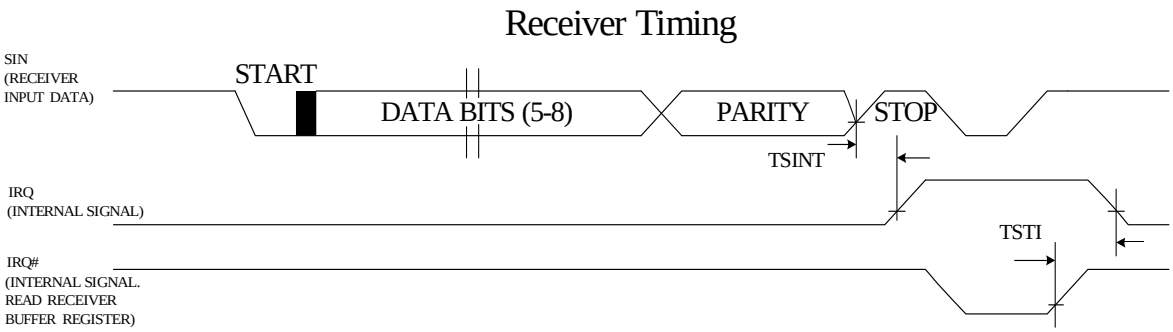

UART Transmitter Timing

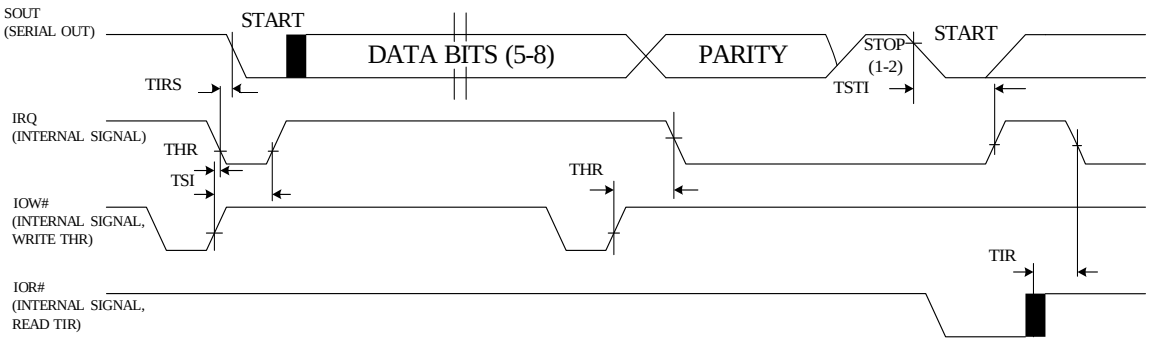

21.7 Modem Control Timing

Modem Control Timing

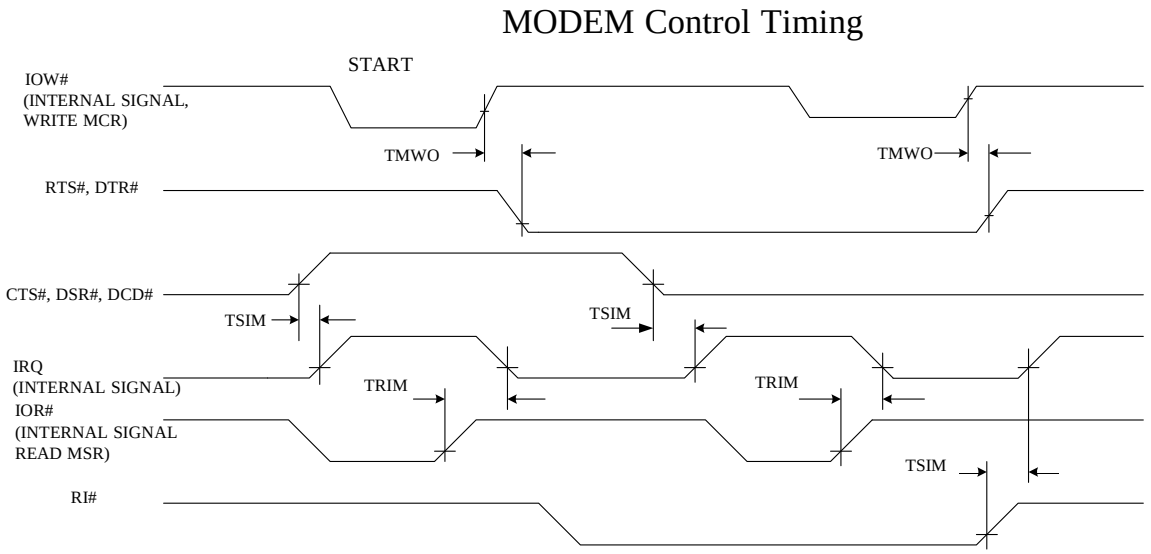

21.7.1 Writing Cycle Timing

Write Cycle Timing

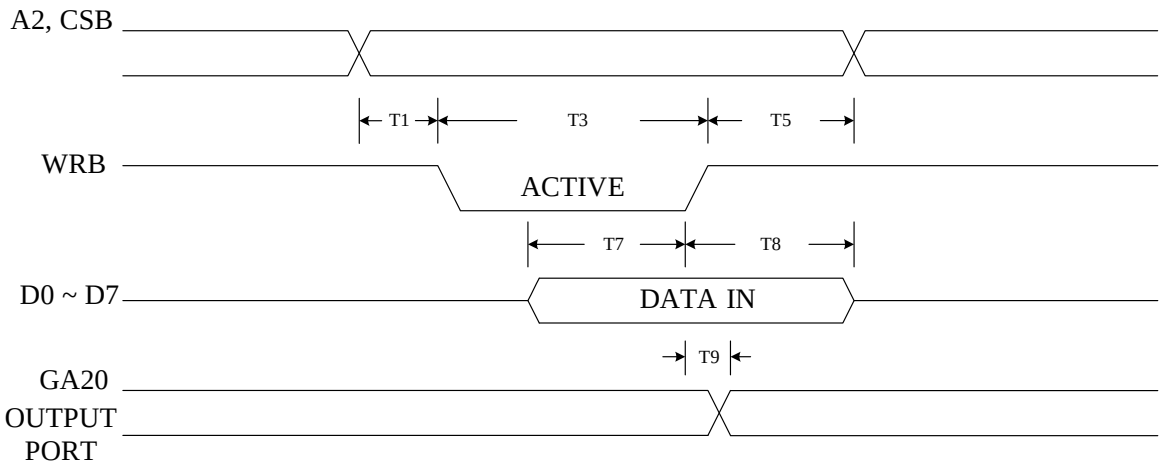

21.7.2 Read Cycle Timing

Read Cycle

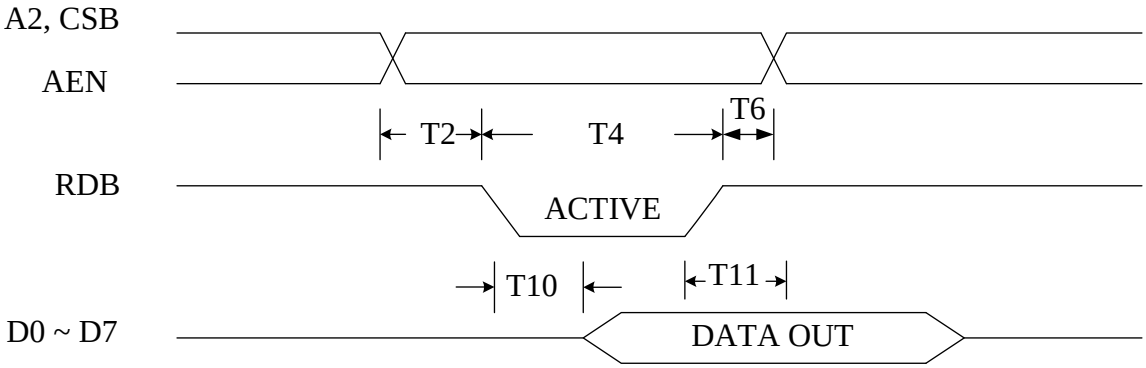

21.7.3 Send Data to K/B

Send Data to K/B

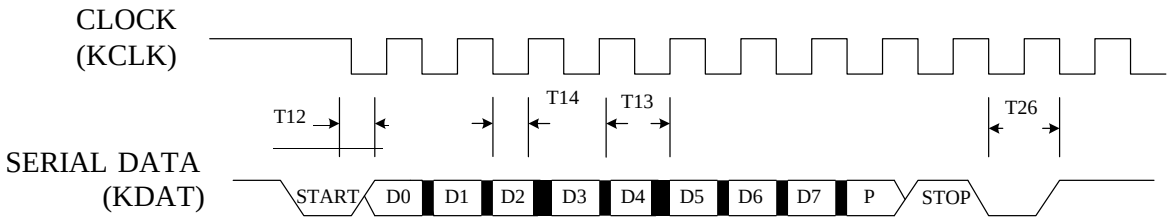

21.7.4 Receive Data from K/B

Receive Data from K/B

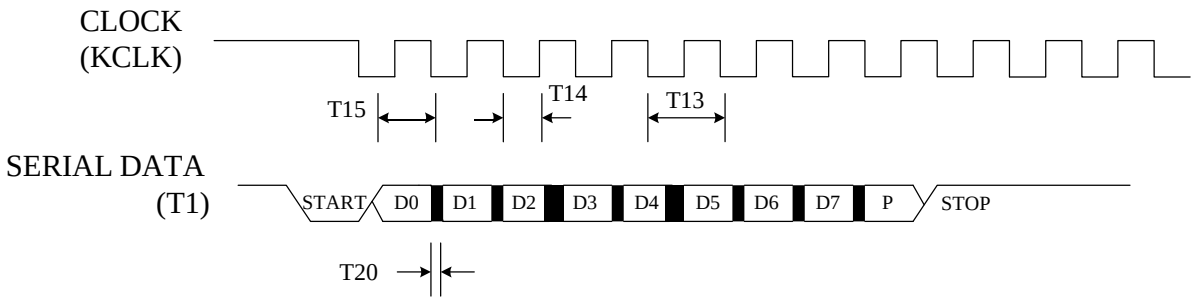

21.7.5 Input Clock

Input Clock

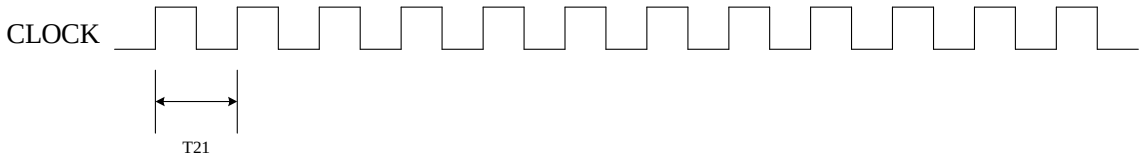

21.7.6 Send Data to Mouse

Send Data to Mouse

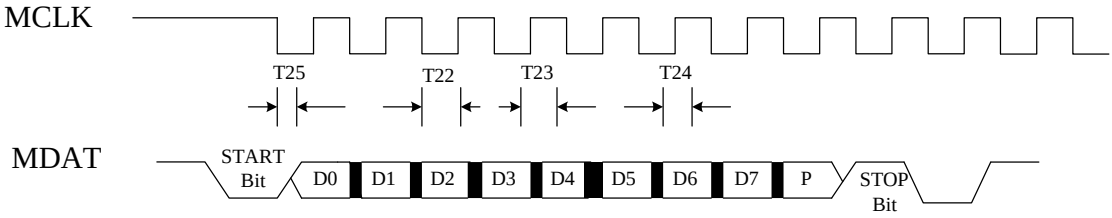

21.7.7 Receive Data from Mouse

Receive Data from Mouse

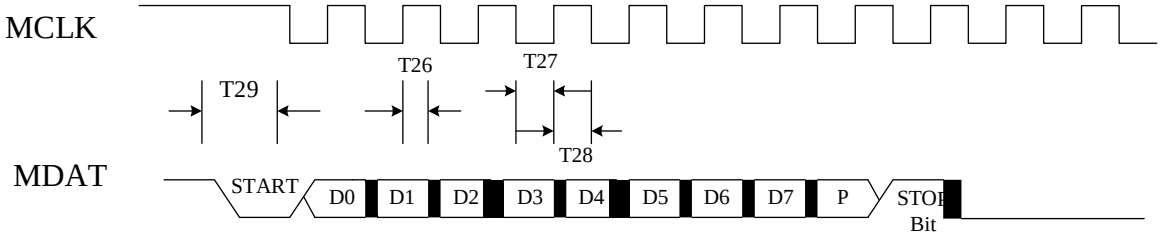

21.8 GPIO Timing Parameters

SYMBOL	PARAMETER	MIN.	MAX.	UNIT
t_{WGO}	Write data to GPIO update		300(Note 1)	ns

Note: Refer to Microprocessor Interface Timing for Read Timing.

21.8.1 GPIO Write Timing

GPIO Write Timing diagram

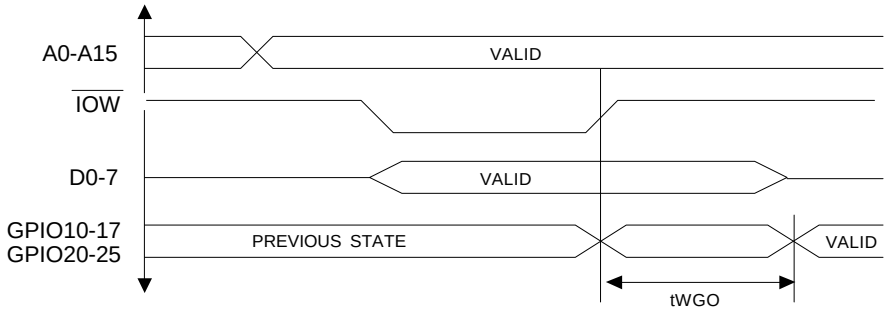

22. TOP MARKING SPECIFICATIONS

1st line: Nuvoton logo
2nd line: part number: NCT5532D (Green package)
3rd line: wafer production series lot number: **28201234**
4th line: tracking code 123G9AFA

- **123**: packages made in 2011, week 23
- **G**: assembly house ID; G means GR, A means ASE, etc
- **9**: code version; 9 means code 009
- **A**: IC revision; A means version A; B means version B, and C means version C
- **FA**: Nuvoton internal use

23. ORDERING INFORMATION

PART NUMBER	PACKAGE TYPE	PRODUCTION FLOW
NCT5532D	64Pin LQFP (Green package)	Commercial, 0°C to +70°C

24. PACKAGE SPECIFICATION

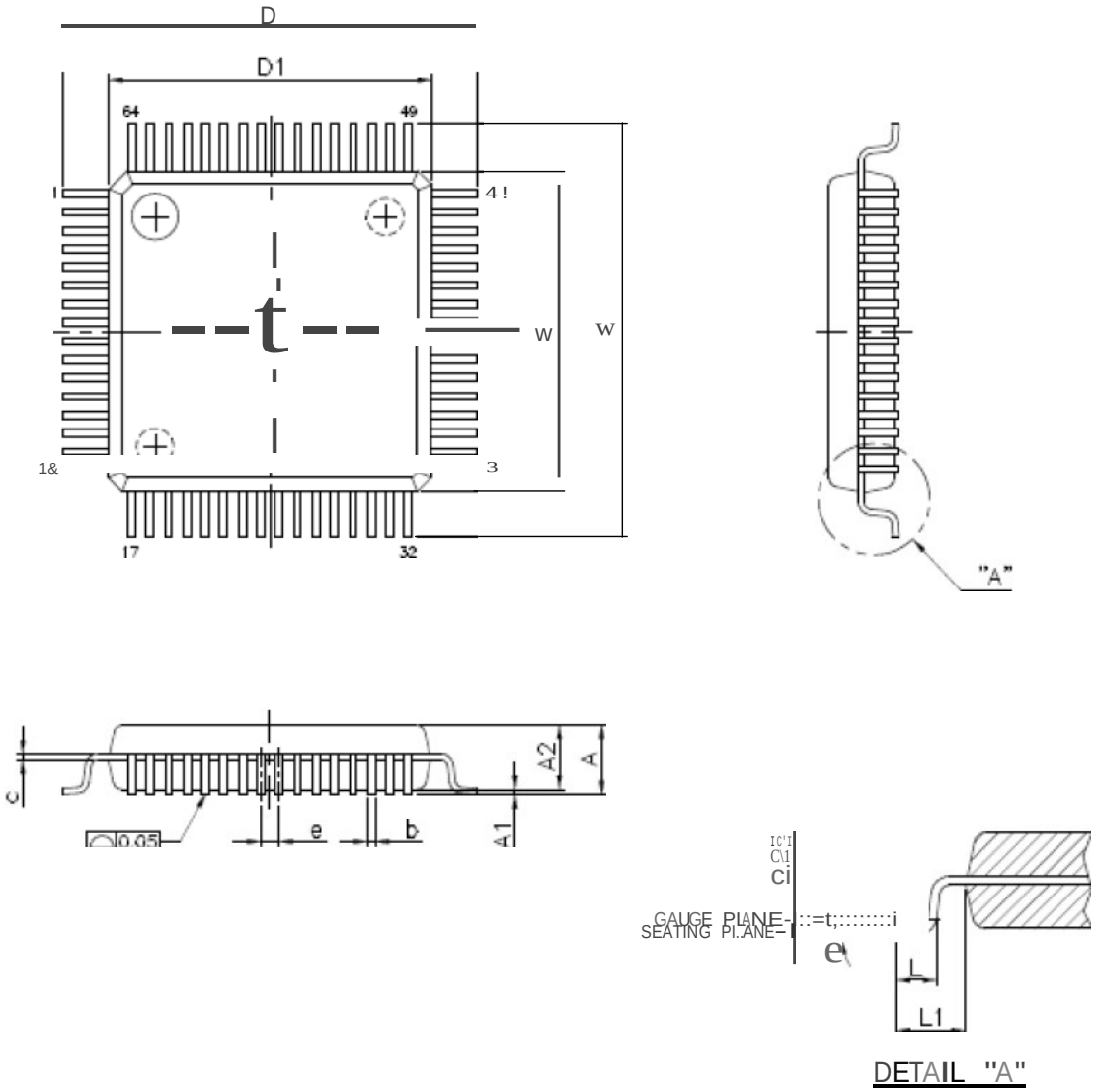

VARIATIONS (ALL DIMENSIONS SHOWN IN MM)

SYMBOLS	MIN.	NOM.	MAX.
A	—	—	1.60
A1	0.05	—	0.15
A2	1.35	1.40	1.45
b	0.13	0.18	0.23
c	0.09	—	0.20
D	9.00 BSC		
D1	7.00 BSC		
e	0.40 BSC		
E	9.00 BSC		
E1	7.00 BSC		
L	0.45	0.60	0.75
L1	1.00 REF		
θ	0°	3.5°	7°

64-pin (LQFP, 7x7x1.4mm)

25. REVISION HISTORY

VERSION	DATE	PAGE	DESCRIPTION
0.1	06/23/2011	N.A.	Draft datasheet
0.2	07/20/2011	N.A.	Modify pin configuration
0.5	07/26/2011	N.A.	Add functional description and register information
0.6	09/28/2011	P.238, P.239	Correct GPIO (GP24, GP55) multi-function description
0.7	09/30/2011	P.239	Correct GPIO (GP54) multi-function description

Important Notice

Nuvoton products are not designed, intended, authorized or warranted for use as components in systems or equipment intended for surgical implantation, atomic energy control instruments, airplane or spaceship instruments, transportation instruments, traffic signal instruments, combustion control instruments, or for other applications intended to support or sustain life. Furthermore, Nuvoton products are not intended for applications wherein failure of Nuvoton products could result or lead to a situation wherein personal injury, death or severe property or environmental damage could occur.

Nuvoton customers using or selling these products for use in such applications do so at their own risk and agree to fully indemnify Nuvoton for any damages resulting from such improper use or sales.

Please note that all data and specifications are subject to change without notice.
All the trademarks of products and companies mentioned in this datasheet belong to their respective owners.